/ Descriptions

SOT-89 Voltage Regulator in a SOT-89 Plastic Package.

/ Features

100mA,
3-Terminal regulators, output current up to 100 mA, internal thermal overload protection and short-circuit limiting, HF Product.

/ Applications

Voltage Regulator.

/ / Equivalent Circuit or Application Circuit



/ Pinning

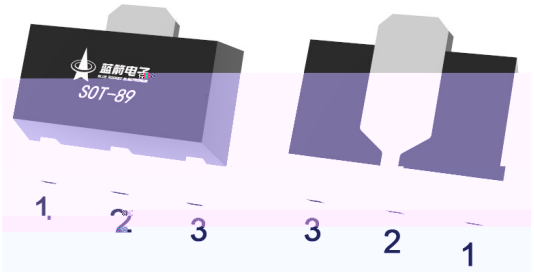

PIN1 OUT PIN 2 GND PIN 3 IN

/ Marking

Marking	HL12

/ Absolute Maximum Ratings(Ta=25)

Parameter	Symbol	Rating	Unit
Input voltage	V_I	35	V
Output current	I_O	100	mA
Operating Temperature Range	T_{OPR}	-40 125	
Power Dissipation	P_D	500	mW
Storage temperature range	T_{stg}	-65 150	

/ Electrical Characteristics(Ta=25)

Parameter	Symbol	Test Conditions	Min	Typ	Max	Unit
Output voltage	V_O	Io=40mA T_j=25	11.5	12	12.5	V
		I_O=1mA to 40mA V_I=14V to 27V	11.4	12	12.6	V
		I_O=1mA to 70mA V_I=19V	11.4	12	12.6	V
Input regulation	Vo	V_I=14.5V to 27V T_j=25		55	250	mV
		V_I=16V to 27V T_j=25		49	200	mV
Ripple rejection	RR	V_I=15V to 25V f=120Hz T_j=25	37	42		dB
Output regulation	V_O	I_O=1mA to 100mA T_j=25		22	100	mV
		I_O=1mA to 40mA T_j=25		13	50	mV
Output noise voltage	V_N	f=10Hz to 100KHz T_j=25		70		μV
Dropout voltage	V_D	T_j=25		1.7		V
Bias current	I_Q	T_j=25		4.3	6.5	mA
		T_j=125			6.0	mA
Bias current change	I_Q	V_I=16V to 27V			1.5	mA
		I_O=1mA to 40mA			0.1	mA

/ Electrical Characteristic Curve

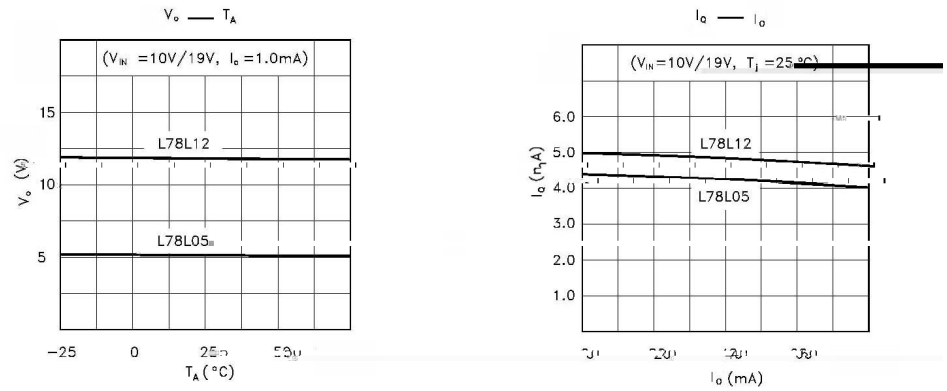

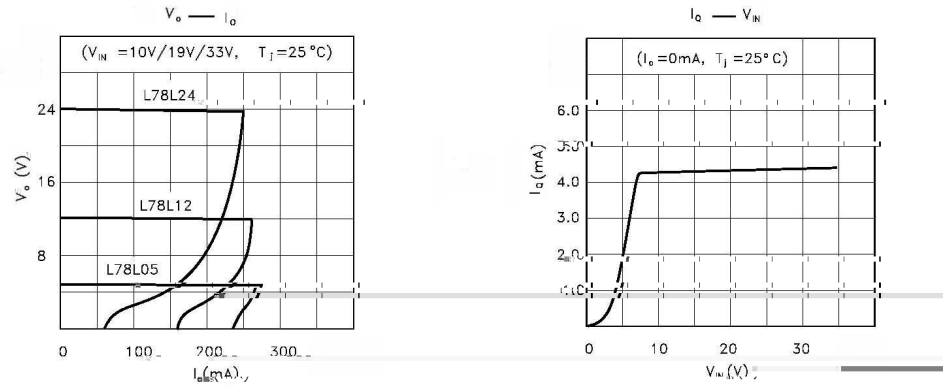

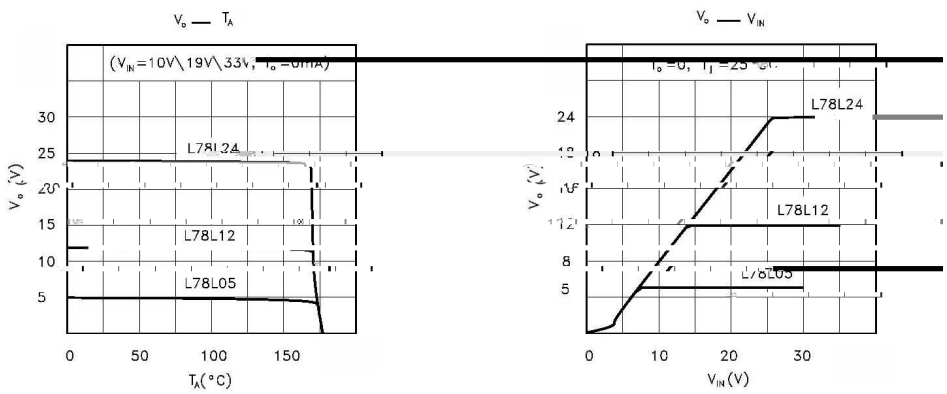

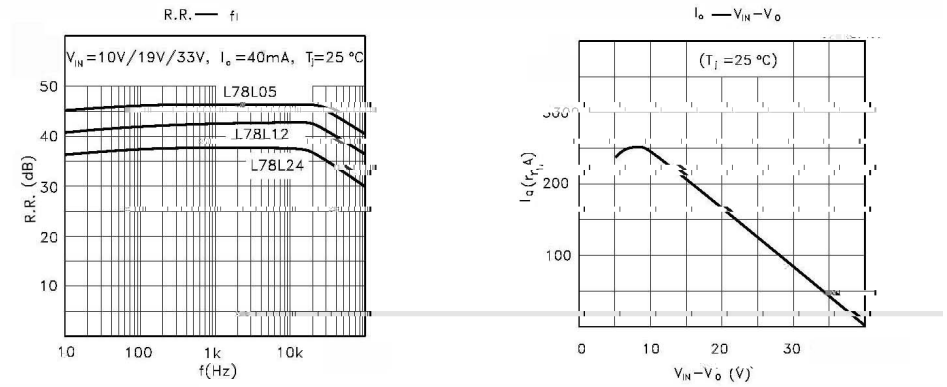

/ Package Dimensions

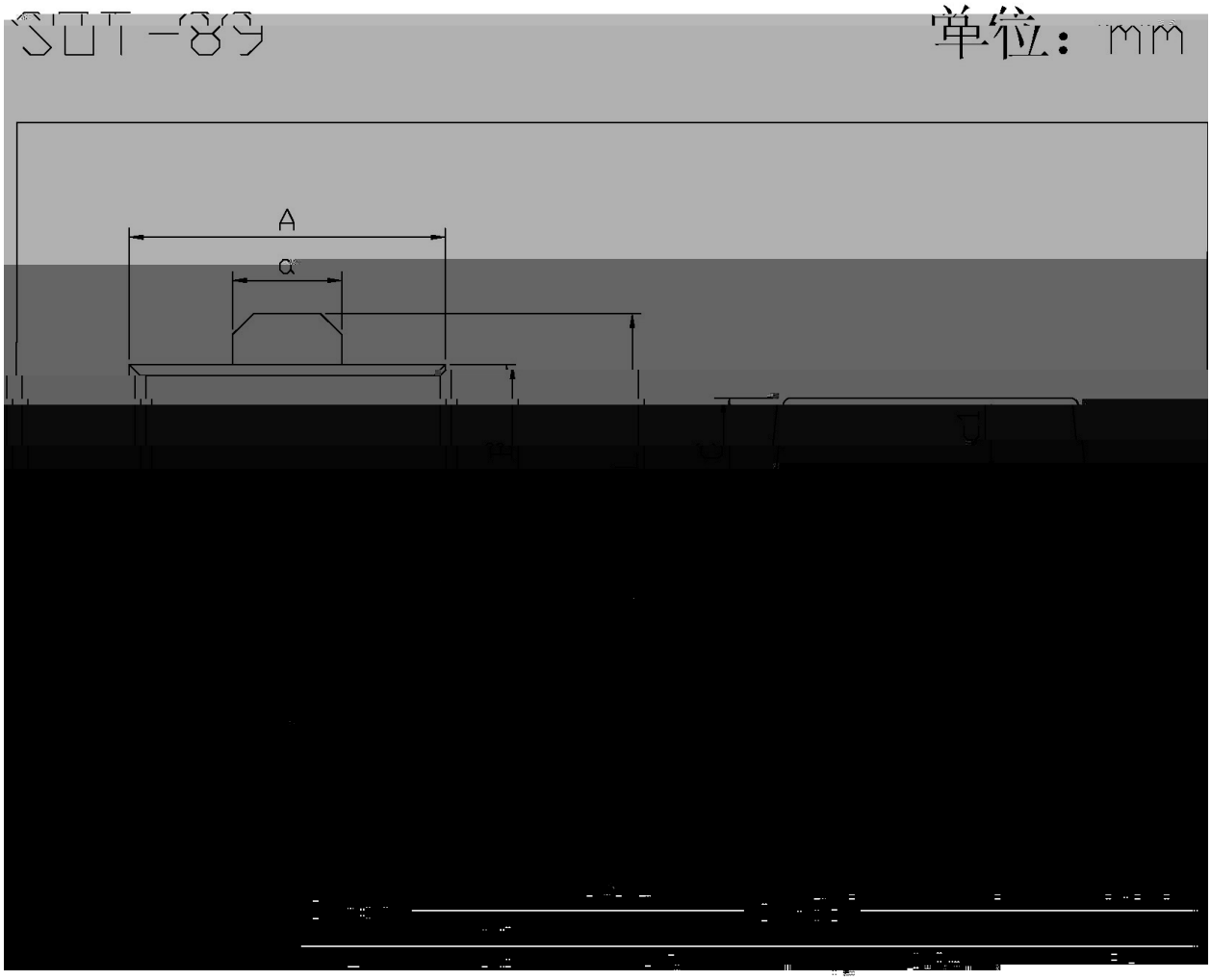

/ Marking Instructions

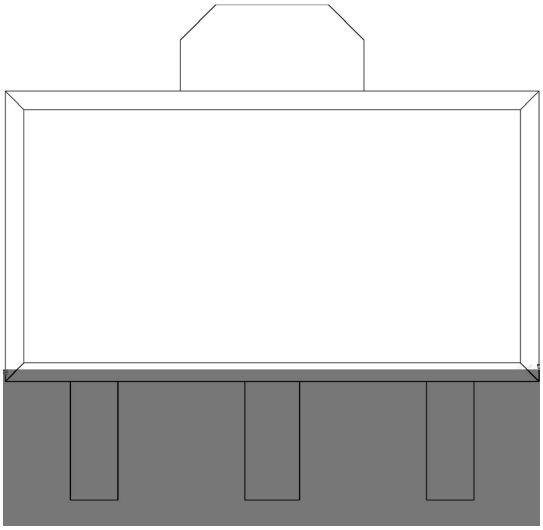

H

L12

(