/ Descriptions

WR0596 Ṃ Ṃ Ŀ SQS Æ Ṁ ч s ǁ ˥ Silicon PNP transistor in a TO-263Plastic Package.

/ Features

78083 Z ˏ ˻ ı ' ʒ ˛ ı Љ EU5VG : 4 ; E Й ˊ

For 45-50W audio frequency amplifier output stage, Complementary to BR2SD718B.

/ Applications

ˏ ˻ ˻ ω ˀ ɔ ٮ

Designed for use in audio frequency amplifier.

/ Equivalent Circuit

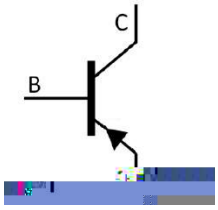

/ Pinning



PIN1 χ Base PIN 2 4 χ Collector PIN 3 χ Emitter

/ h_{FE} Classifications & Marking

h_{FE} Classifications Symbol	R	O
h_{FE} Range	55~110	80~160

/ Electrical Characteristic Curve

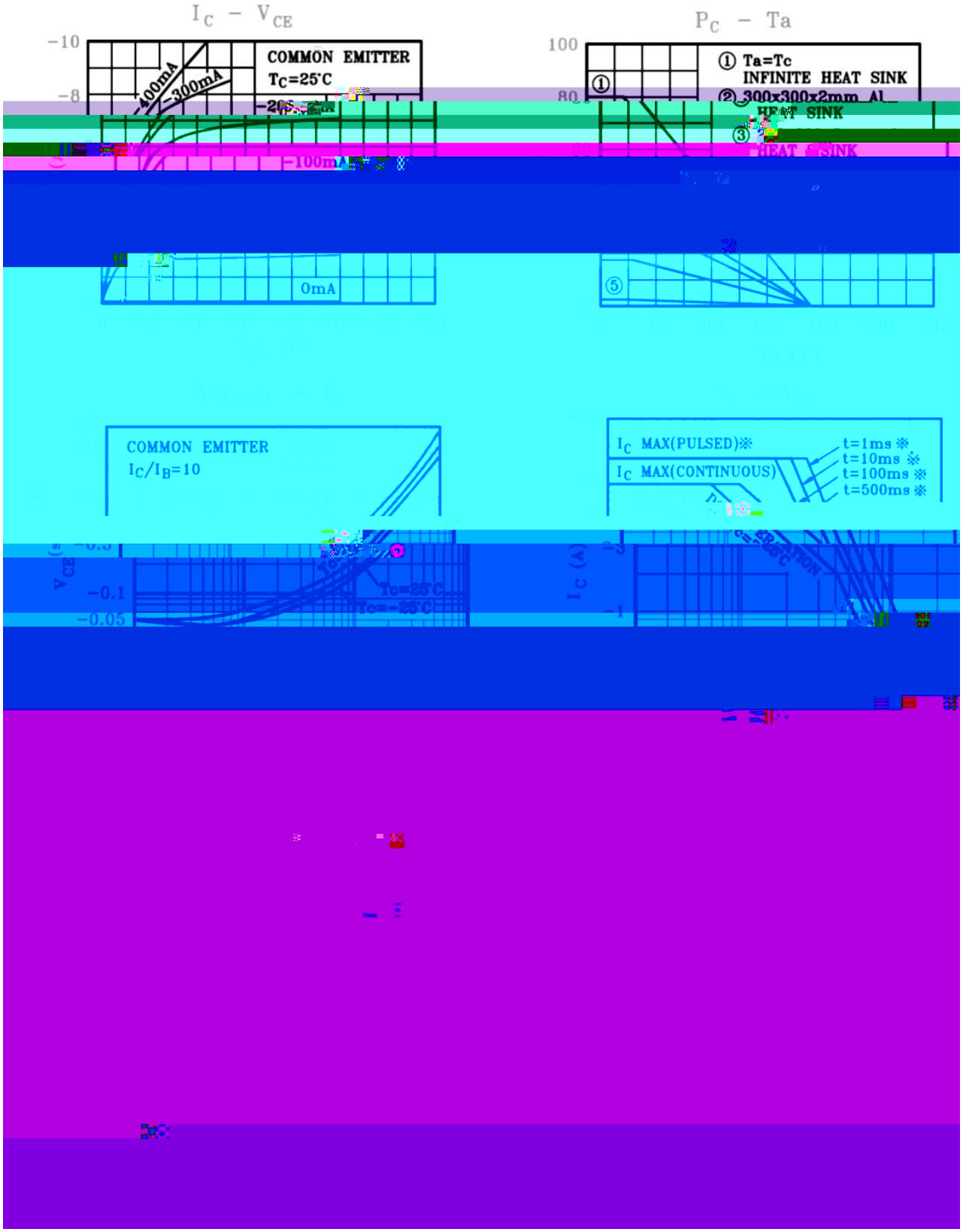

/ Package Dimensions

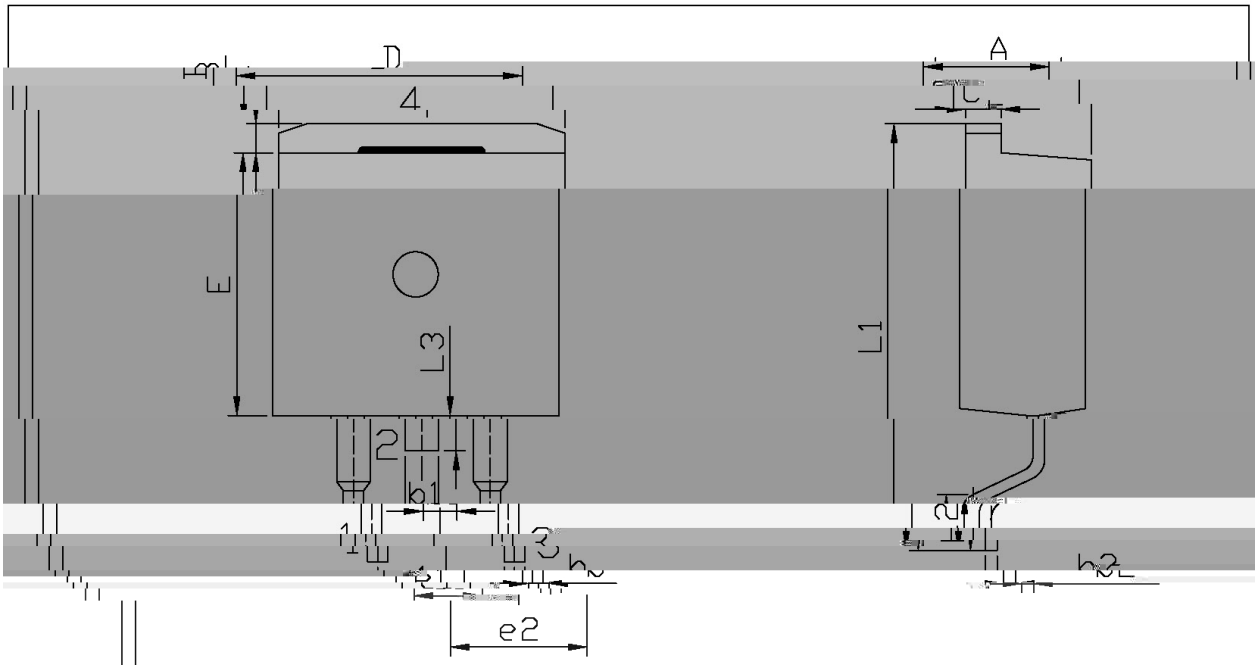

单位：mm

Dimensions In Millimeters		Dimensions In Millimeters		Dimensions In Millimeters	
Max		Min	Max		Min
9.40	A	4.30	4.70	L	9.00
2.74	B	1.00	1.40	e1	2.34

/ Marking Instructions

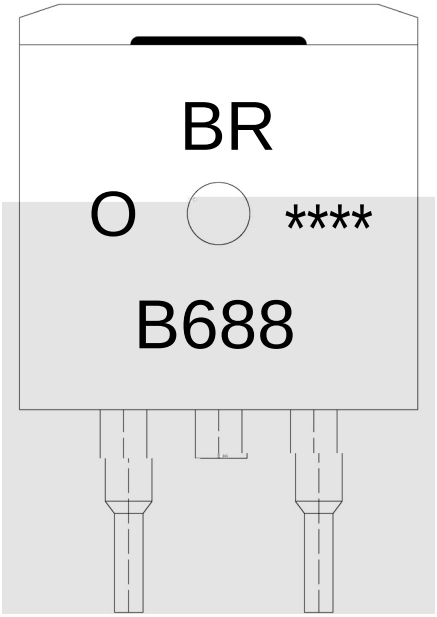

ب ˝ χ

EU χ ⌘ ʒ ᴵ Ɱ

E9 ; ; χ ⌘ ʒ ᴺ Ɱ

R= ⌘ kᴵᴴ ʿ ᶠ Ɱ

---- χ ⌘ ɬ ɾ ŋ̈ ᴺ Ɱ ɩ ɐ ɬ ɾ ŋ̈ ᴺ ψ ק

Note:

BR: Company Code.

B688: Product Type.

O: h_{FE} Classifications Symbol.

****: Lot No. Code, code change with Lot No.