Precision adjustable shunt regulator in a SOT-89 Plastic Package.

Precise reference voltage to 2.500V;guaranteed 0.4%,0.8% reference voltage Tolerance; sink current capability,1.0mA 100mA;quick turn-on; adjustable Output voltage, V_O=V_{ref} 37V;low operational cathode current,400 A typical; 0.15 typical output impedance, HF product.

Linear regulators, adjustable power L1 Tf0 -4.28 TD0aff04df09(42.72 433. i c0 Tw449.66 40.40af8ge)52 5Tw449.6

Parameter	Symbol	Rating	Unit
Cathode to Anode Voltage	V_{KA}	37	V
Cathode Current Range, Continuous	I_K	-100 +100	mA
Reference Input Current Range, Continuous	I_{REF}	0.05 +10	mA
Power Dissipation	P_D	770	mW
Operating Ambient Temperature	T_{amb}	-40 125	
Junction Temperature	T_j	160	
Storage Temperature Range	T_{stg}	-65 150	

Parameter	Symbol	Test Conditions	Min	Typ	Max	Unit
Reference Input voltage	V_{REF}	$V_{KA}=V_{REF}$ I_K=10mA(A=0.4%)	2.490	2.500	2.510	V
		$V_{KA}=V_{REF}$ I_K=10mA(B=0.8%)	2.480	2.500	2.520	V
Deviation of Reference Input Voltage Over-Temperature	V_{REF} /T	$V_{KA}=V_{REF}$ I_K=10mA T_A=-25 85		4.5	17	mV
Ratio of Change in Reference Input Voltage to the Change in Cathode Voltage	V_{REF} / V_{KA}	I_K=10mA V_{KA} =10V to V_{REF}		-1	-2.7	mV/V
		I_K=10mA V_{KA} =36V to 10V		-0.45	-2.0	mV/V
Reference Input current	I_{REF}	I_K=10mA R_1=10K R_2=open		1.0	4.0	A
Deviation of Reference Input Current Over Full Temperature Range	I_{REF}/T	I_K=10mA R_1=10K , R_2=open T_A=-40 125		0.4	1.2	A
Minimum Cathode Current for Regulation	$I_{K(min)}$	$V_{KA}=V_{REF}$		0.4	1.0	mA
Off-state cathode current	$I_{K(off)}$	V_{KA}				

& Test circuits&Typical Application

BLOCK DIAGRAM:

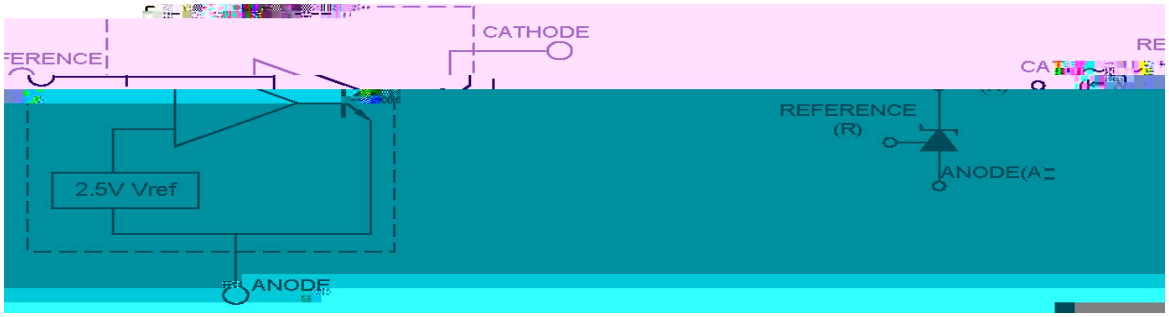

TEST CIRCUITS:

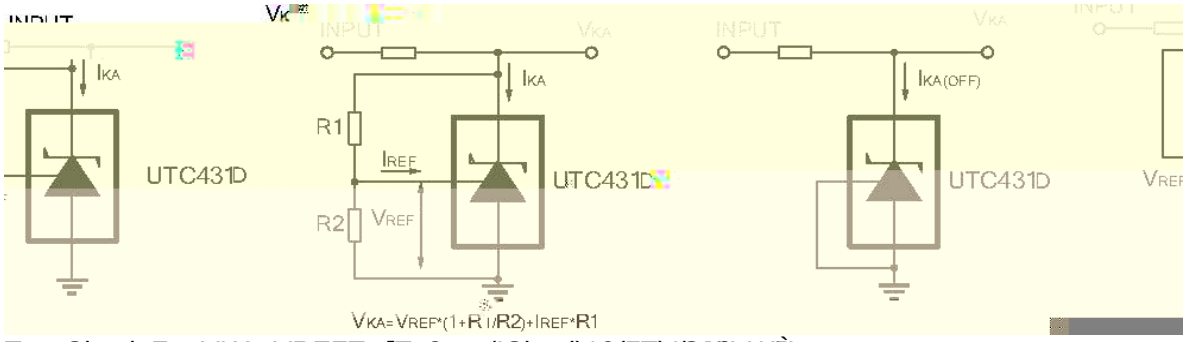

Test Circuit For VKA=VREFTw[Tu8 cm/ICircui)19(7T)1ÞC%gWÈ

/ Electrical Characteristic Curve

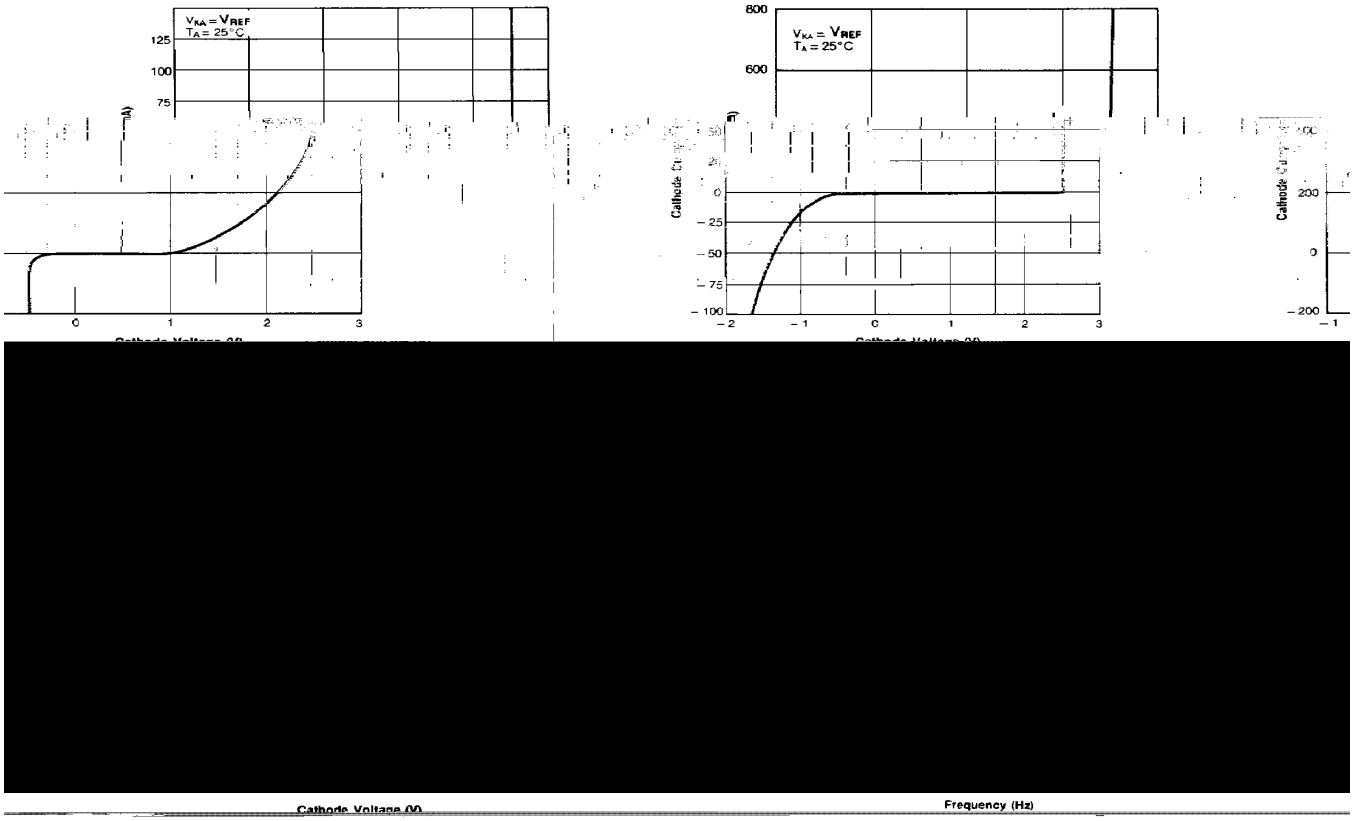

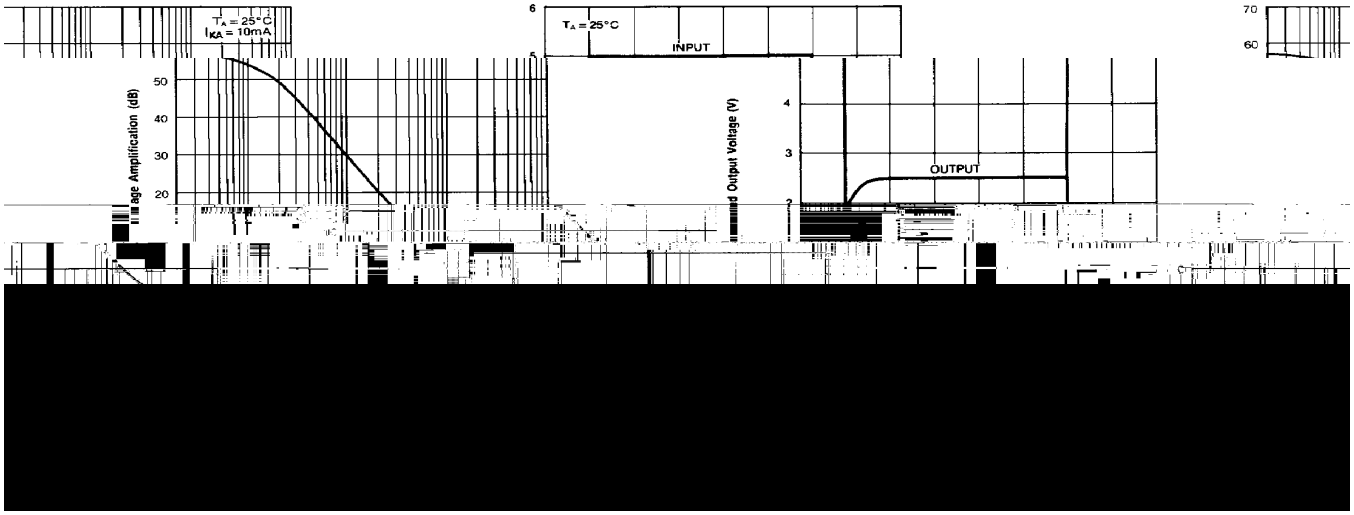

/ Package Dimensions

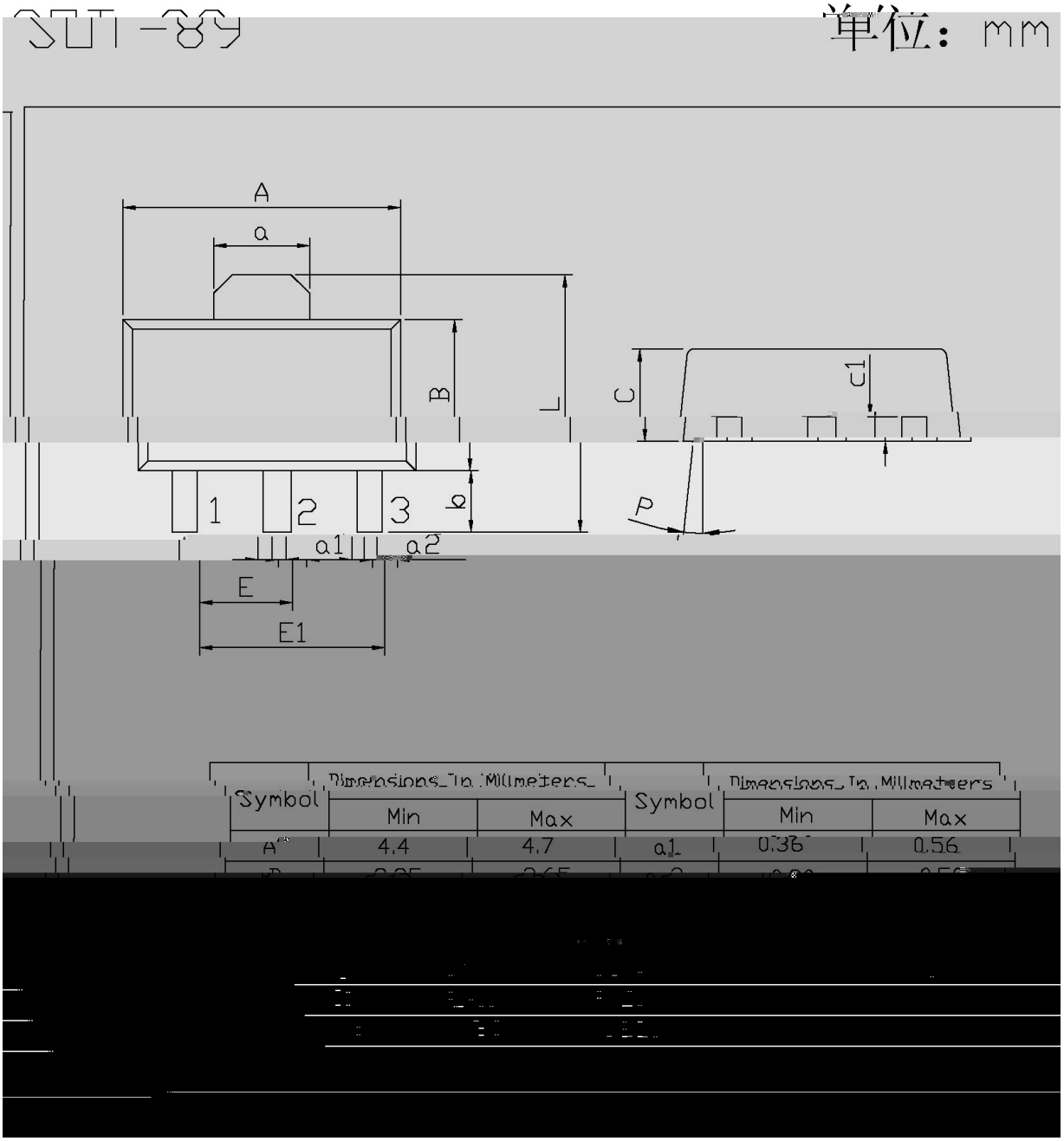

Symbol	Dimensions In Millmeters		Symbol	Dimensions In Millmeters	
	Min	Max		Min	Max
A	4.4	4.7	a1	0.36	0.56

/ Marking Instructions

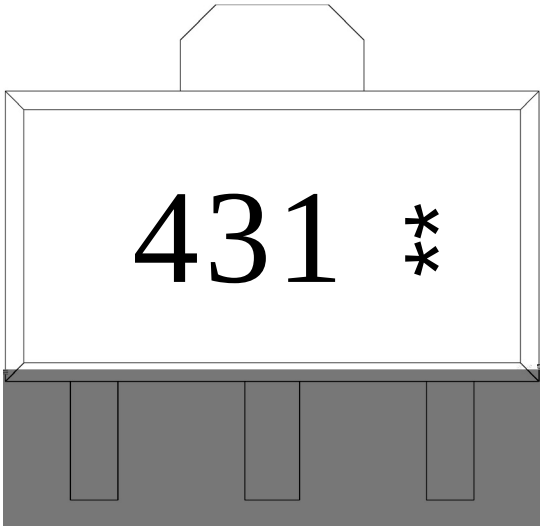

431

Note:

431:	Product Type Code
**:	Lot No. Code, code change with Lot No

( ) /

Note:

1 150 180 60 90sec;

2 245 5 5 0.5sec;

3 2 10 /sec.

1.Preheating:150~180 , Time:60~90sec.

2.Peak Temp.:245 5 , Duration:5 0.5sec.

3. Cooling Speed: 2~10 /sec.

/ Resistance to Soldering Heat Test Conditions

260 5 10 1 sec. Temp.:260±5 Time:10±1 sec

/ Packaging SPEC.

/ REEL

Package Type	Units	Dimension	(unit mm^3)