/ Pinning

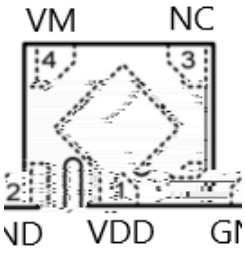

Pin Number	Pin Name	Pin Description
1	VDD	Power Supply
2	GND	Ground, connect the negative terminal of the battery to this pin.
3	NC	No electrical connection
4	VM	The negative terminal of the charger. The internal FET switch connects this terminal to GND.

/ Marking

See Marking Instructions.

/ Absolute Maximum Ratings(Ta=25)

/Parameter	/Symbol	/Value	/Unit
V_{DD} input pin voltage	V_{IN}	-0.3 to +6	V
V_M input pin voltage	V_{VM}	-6 to +10	V
Maximum Junction Temperature	T_J	125	
Operating Junction Temperature	T_{opr}	-40 to +85	
Storage Temperature	T_{stg}	-55 to +150	
Package Thermal Resistance	$R_{\theta JA}$	250	/W
ESD HBM	ESD	2000	V

/Parameter	/Symbol	/Test Condition	/Min	/Typ	/Max	/Unit
Overcharge Detection Voltage	V_{CU}		4.25	4.30	4.35	V
Overcharge Release Voltage	V_{CL}		4.05	4.10	4.15	V

/ Functionl Block Diagram

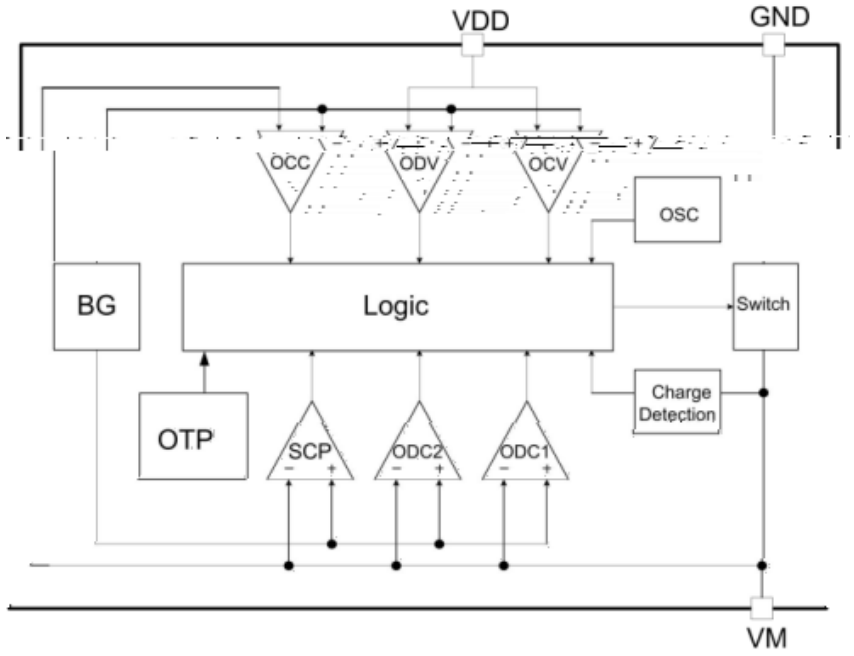

/ Functional Description

BRCL3130ZN

A ɔw ŭ

BRCL3130ZN

/ Abnormal Charge Current Detection

VM I_{IOCC}
BRCL3130ZN FET
VM GND (VCHA) 0V
0V

If the VM pin voltage drops below the Overcharge Current Detection during charging under the normal condition and it continues for the overcharge detection delay time or longer, the BRCL3130ZN turns the charging control FET off and stops charging. This action is called abnormal charge current detection.
Abnormal charge current detection is released when the voltage difference between VM pin and GND pin becomes higher than the charger detection voltage (VCHA) by separating the charger. Since the 0 V battery charging function has higher priority than the abnormal charge current detection function, abnormal charge current may not be detected by the product with the 0 V battery charging function while the battery voltage is low.

/ Load Short-circuiting Condition

VM VSHORT tSHORT
BRCL3130ZN VM VSHORT

If voltage of VM pin is higher short circuiting protection voltage (VSHORT) and it continues for the tSHORT or longer, the BRCL3130ZN will stop discharging and battery is disconnected from load. This status is released when voltage of VM pin is higher than short protection voltage (VSHORT), such as when disconnecting the load.

0V / 0V Battery Charging Function

0V
VDL IC
(1)
“ 0V ” “ 0V ”
(2) “ 0V ” “ ” , “ 0V ”
IC VDL

(3)
VM GND VM GND

This function enables the charging of a connected battery whose voltage is 0V by self-discharge. When connectes to a charger , the discharging control FET is off and the charging current flows through the internal parasitic diode in the discharging control FET. If the battery voltage becomes equal to or higher than the overdischarge release voltage (VDL), the normal condition returns.
Notes (1) Some battery providers do not recommend charging of completely discharged batteries. Please refer to battery providers before the selection of 0 V battery charging function.
(2) The 0V battery charging function has higher priority than the abnormal charge current detection function. Consequently, a product with the 0 V battery charging function charges a battery and abnormal charge current cannot be detected during the battery voltage is low.
(3) When a battery is connected to the IC for the first time, the IC may not enter the normal condition in which discharging is possible. In this case, set the VM pin voltage equal to the GND voltage (short the VM and GND pins or connect a charger) to enter the normal condition.

/ Timing Chart

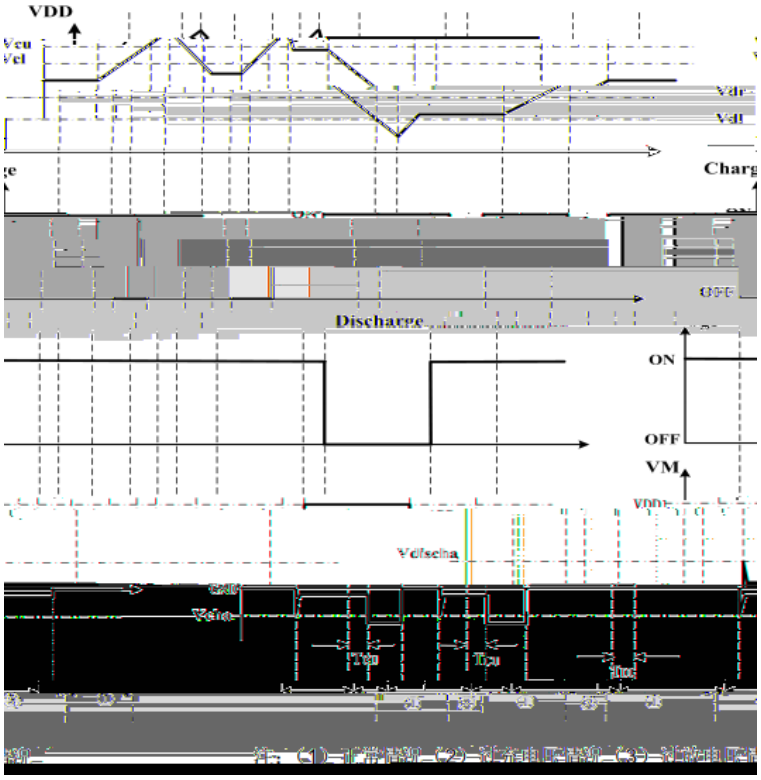

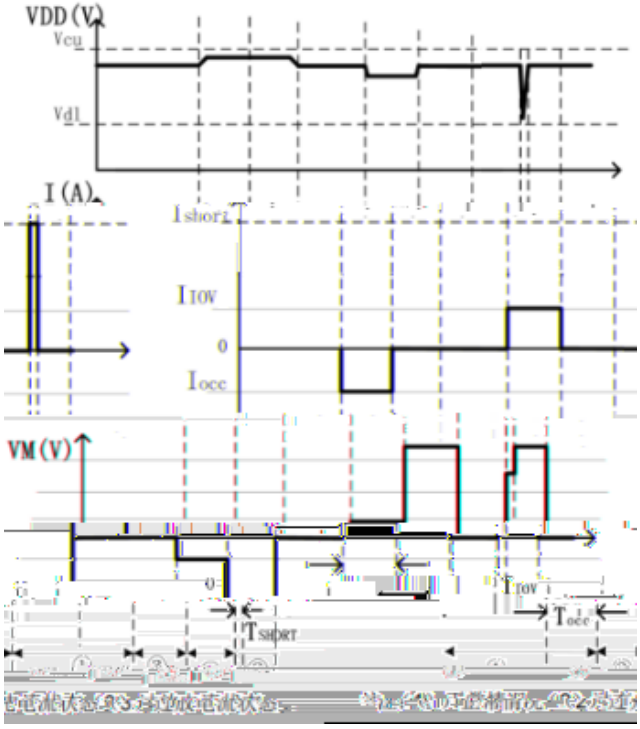

/ Timing Chart

/ Package Dimensions



/ Marking Instructions

3130

****

Note:

( ) / Temperature Profile for IR Reflow Soldering(Pb-Free)
