BRCO7350HT

Rev.A Apr.-2024

DATA SHEET

/ Descriptions

VRW0;< Ṃ Ṃ Ŀ Ḩ я Ṯ ɬ ớ ᛋ я ʜ

Low dropout linear regulator in a SOT-89 Plastic Package .

/ Features

Ḩ ̄ ɔ̃ Ṫ Ă ɔ ᚳ χ 2uA

ᛇ ̣ ɔ ᚳ χ 300mA

Ḩ я Ṯ χ 200mV@100mA(V_{OUT}=5.0V)

ᚷ ᛋ ỷ χ ° 2%

ᚷ ɔ ◊ ̈Ḣ ⅝ χ 70dB@1kHz

Ḩ ᛇ ̣ ƨ ɸ χ 90uV$_{RMS}$ ε 10Hz~100kHz ζ

̣ ̊ OBJ ᛇ ᛊ ɬ ớ ᵓ ᛇ ̣ ق ̈ ̓ ɔ̃ φ Ẕ

ᛎ ɹ ɔ ᚳ ᛂ ı ˜ ث ʒ ï

ص ♬ ʒ ï

ṇ̀ ɾ β

/ Applications

Æ ɤ ɔ – ĕ ɔ ɸ ʈ OBJ ᛋ я ɔ ◊

ṇ̣ ʒ ɸ ʈ OBJ ᛋ я ɔ ◊

Ḳ ɔ ̆ ʊ OBJ ᛋ я ɔ ◊

ᛋ ʊ ɔ ʕ OBJ ᛋ я ɔ ◊

ӝ ̈Ạ Ã ıı ɤ ɷ ʜ OBJ ᛋ я ɔ ◊

/ Equivalent Circuit

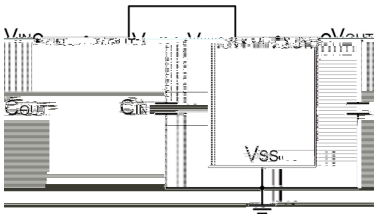

/ Pinning

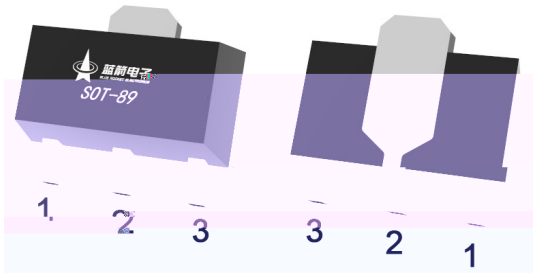

PIN1 χ GND PIN 2 χ VIN PIN 3 χ VOUT

/ Marking

ð м ᛋ ب ̈

See Marking Instructions.

/ Absolute Maximum Ratings(Ta=25)

v ̈Ω	ɿ N	̈Ω Ö	D Ӈ
ʒ ʔ ɔ ʀ	V_{IN}	-0.3 to 40	V
ʒ ˛ ɔ ǁ	I_{OUT}	600	mA
ǟ ̈Ω ı '	P_D	0.6	W
Ч è □ ỷ	T_{stg}	-40 to +125	°C
Ṫ Ă □ ỷ	T_A	-40 to +125	
ʅ ǘ ì □ ỷ ε 10s ζ	T_{sold}	260	°C
گ ˝ ɔ ɿ ʅ	HBM	2	kV
	MM	200	V

/ Electrical Characteristics(T_A=25 , V_{IN}=V_{OUT}+1V, C_{IN}=C_{OUT}=1uF, unless otherwise specified)

v ̈Ω	ɿ N	ǁ ؛ ɿ ʈ	ω ṇ Ö	Ɛ ʒ Ö	ω ʑ Ö	D Ӈ
ʒ ʔ ɔ ʀ	V_{IN}				36	V
ʒ ˛ ɔ ʀ ε 1 ζ	V_{OUT} ε E ζ	I_{OUT}=10mA	4.9	5.0	5.1	V
ʒ ʔ ʒ ˛ ʀ Ṯ ε 2 ζ	V_{dif}	I_{OUT}=100mA V_{OUT}=5.0V		200		mV
˝ ỗ Ṫ Ă ɔ ǁ	I_{SS}	I_{OUT}=0mA		2	5	uA
ق ɔ ɔ ̃Ω '	V_{load}	V_{IN}=V_{OUT} s +1V 1mA ≤ I_{OUT} ≤ 300mA		15	50	mV
ɿ ớ ɔ ̃Ω '	V_{OUT}/ (V_{IN}*V_{OUT})	I_{OUT}=10mA V_{OUT} s +1V ≤ V_{IN} ≤ 36V		0.01	0.1	%/V
ʒ ˛ ɔ ʀ □ ỷ ɿ ̈Ω	V_{OUT}/ (T_A*V_{OUT})	I_{OUT}=10mA -40 ≤ T_A ≤ 125		50		ppm/
ʒ ˛ ɔ ǁ	I_{LIM}	V_{OUT}= 0.5 x $V_{OUT(Normal)}$, V_{IN} = 6.0V	350			mA
ʒ ˛ ~ ʊ ɔ ǁ	I_{SHORT}	V_{OUT}=V_{SS}		100		mA
ɔ ◊ ɿ ʟ ̈H ⅝	PSRR	I_{OUT}=50mA f=100Hz		75		dB
		I_{OUT}=50mA f=1kHz		70		
		I_{OUT}=50mA f=10kHz		55		
		I_{OUT}=50mA f=100kHz		40		

/ Electrical Characteristics(T_A=25 , V_{IN}=V_{OUT}+1V, C_{IN}=C_{OUT}=1uF, unless otherwise specified)

v ̈Ω̣	˧ N	⊥ ؛ ˆ ̣	ω̣ ṇ Ö	Ɛ ʒ Ö	ω̣ ᵹ Ö	D ɥ
ɟ̣ ʒ ɸ ɔ я	V_{ON}	BW=10Hz to 100kHz		90		uV_{RMS}
♬ ʜ Ă □ ẙ	T_{SD}			160		
♬ ʜ Ă ق̇ ◖ □ ẙ	T_{SD}			20		

(1) V_{OUT} ε E ζ ⌘ ḫ ̈ ɟ̣ ɔ я ı V_{OUT} ε S ζ ⌘ ɸ ḧ ‰ ˧ ɟ̣ ɔ я

(2) ɟ ʔ ɟ̣ ɔ я T̲ ḧ Θ χ ɖ ḧ ق ̈ ˆ ̣ ï ı ɟ̣ ɔ я V_{OUT} ı ˧ ỹ ï ʊ ɟ ʔ ɔ я ı ´ ɓ ɟ̣ ɔ я ʊ Ḥ̇ V_{OUT}*98%̀H ı ɟ ʔ ɔ я ⊃ ɟ̣ ɔ я T̲ Ö

BRCO7350HT

/ Typical Application Circuit

ڑ، ح د я د ت / Circuit for Increasing Output Voltage

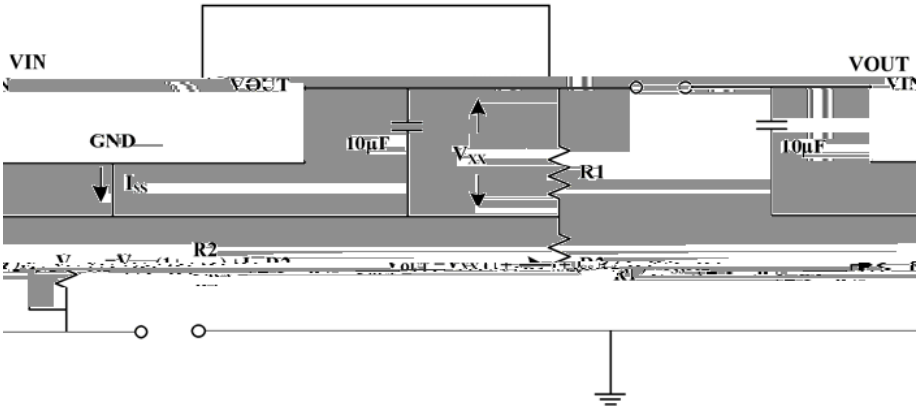

ڑ، د ╚ ذ ` د ت / Constant Current Regulator

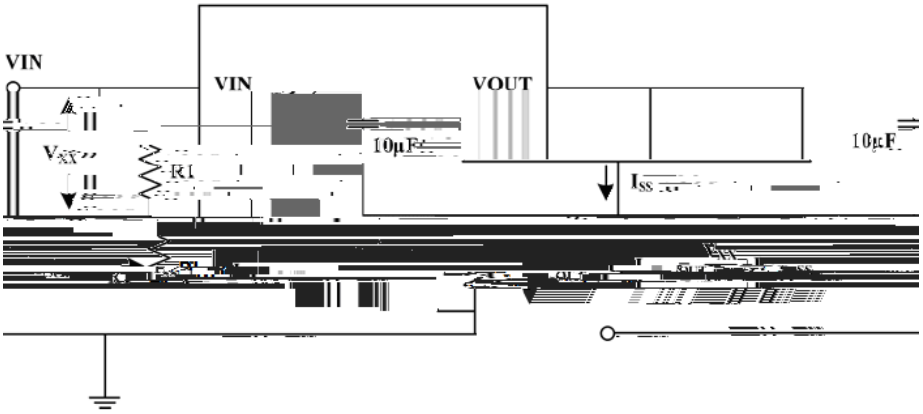

ژ ڑ، د ت / Double Output Circuit

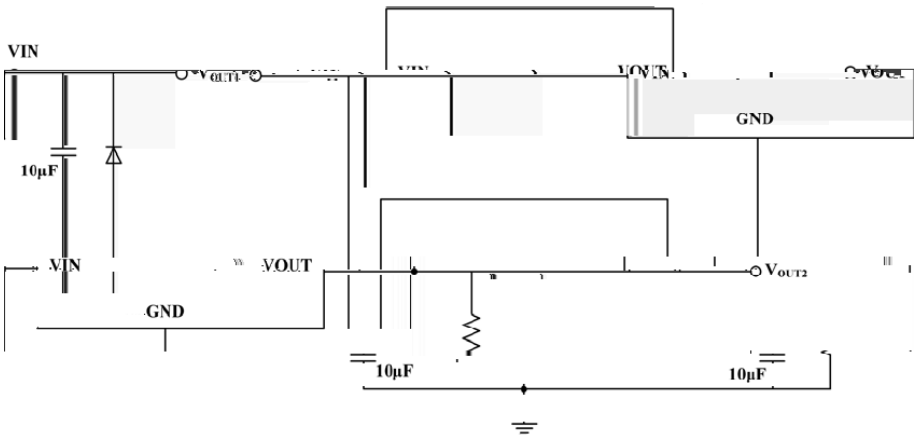

BRCO7350HT

/ Marking Instructions

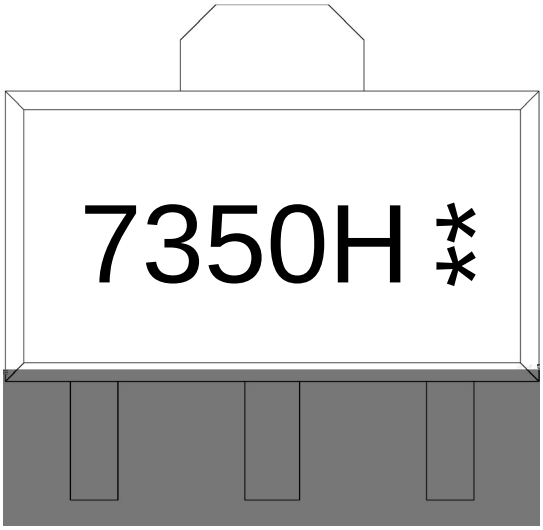

ᴗ ˝ χ

7350H χ ⱨ ʒ ᴺ ⱡ

** χ ⱨ ⅰ ⱨ ŋ̈ ᴺ ⱡ ⅰ ⱥ ⅰ ⱨ ŋ̈ ᴺ ⱱ Ɫ

Note:

7350H: Product Type Code

**: Lot No. Code, code change with Lot No

( ) / Temperature Profile for IR Reflow Soldering(Pb-Free)



ب ˝ χ

1 أ ♬ □ ỷ 150 Ḱ 180 ɬ ı ̀H ڑ 60 Ḱ 90sec;

2 Š Ö □ ỷ 245 ° 5 ɬ ı ̀H ڑ ̀Y ⅄ ⋈ 5 ° 0.5sec;

3 ì ̇ ⅄ ˛ ɔ ھ ỷ ⋈ 2 Ḱ 10 ɬ /sec.

Note:

1.Preheating:150~180 ɬ , Time:60~90sec.

2.Peak Temp.:245 ° 5 ɬ , Duration:5 ° 0.5sec.

3. Cooling Speed: 2~10 ɬ /sec.

/ Resistance to Soldering Heat Test Conditions

□ ỷ χ 260 ° 5 ɬ ̀H ڑ χ 10 ° 1 sec. Temp.:260±5 Time:10±1 sec

/ Packaging SPEC.

ɔ ̀ ɣ ⊢ / REEL

Package Type	Units	Dimension (unit mm³)