evise e o

A	2022-8-12	ALL	ALL		

Des ip ions

SOT-89

Low dropout linear regulator in a SOT-89 Plastic Package .

e u es

20V	1.5μA	±2%

Low power consumption,Low voltage drop,Small temperature drift coefficient,High input voltage up to 20V,The static current 1.5μA,The output voltage accuracy:±2%,HF Product.

Appli ions

For use in power equipment,Communication equipment,Audio and video equipment.

quiv len i ui

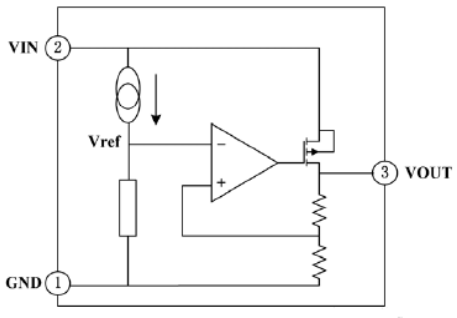

Pinning

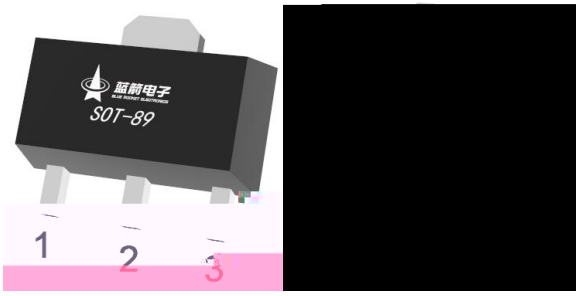

PIN1 GND PIN 2 VIN PIN 3 VOUT

king

/ See Marking Instructions.

Parameter	Symbol	Rating	Unit

T pi l Appli ion i ui

/ Basic Application



/ High Output Current Voltage Regulator

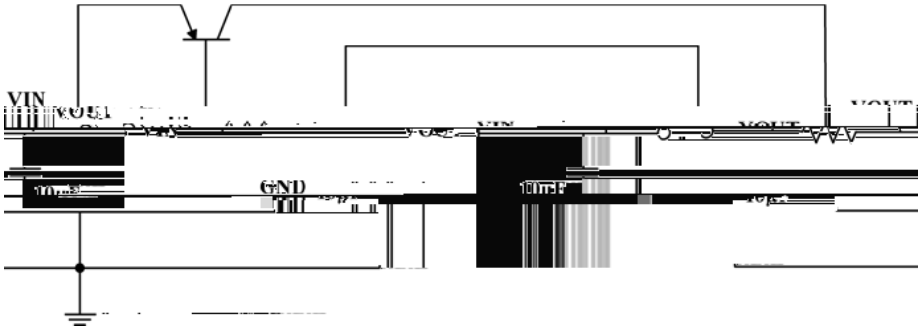

/ Short-Circuit Protection

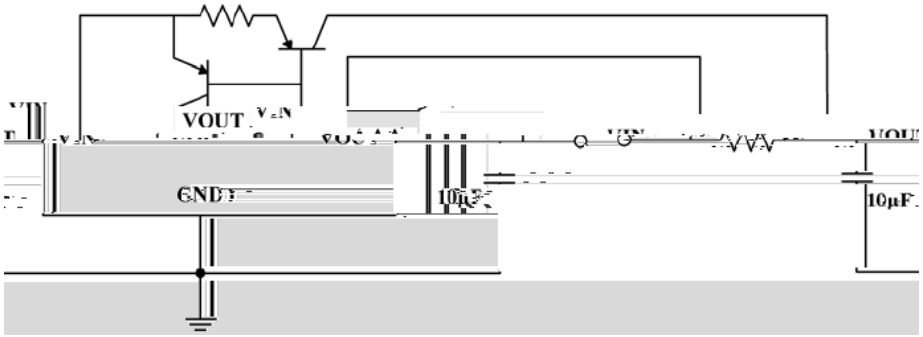

T pi l Appli ion i ui

/

P k ge Di ensions



Note:

1 150 180 60 90sec;

1.Preheating:150~180℃, Time:60~90sec.

2 245±5 5±0.5sec;

2.Peak Temp.:245±5℃, Duration:5±0.5sec.

3 2 10℃/sec.

3. Cooling Speed: 2~10℃/sec.

esis n e o Sol e ing e Tes on i ions

260±5℃ 10±1 sec. Temp.:260±5℃ Time:10±1 sec8

P k ging SP .

/ REEL

Package Type	Units					Dimension		(unit mm3)
	Units/Reel 只/卷盘	Reels/Inner Box 卷盘/盒	Units/Inner Box 只/盒	Inner Boxes/Outer Box 盒/箱	Units/Outer Box 只/箱	Reel	Inner Box	Outer Box
SOT-89	1,000	/	7,000	6	42,000	7″ ×12	180×120×180	390×385×205