SOT-89
Low dropout linear regulator in a SOT-89 Plastic Package .

30V 2.5μA ±2%

Low power consumption,Low voltage drop,Small temperature drift coefficient,High input voltage up to 30V,The static current 2.5μA,The output voltage accuracy:±2%.HF Product.

For use in power equipment,Communication equipment,Audio and video equipment.

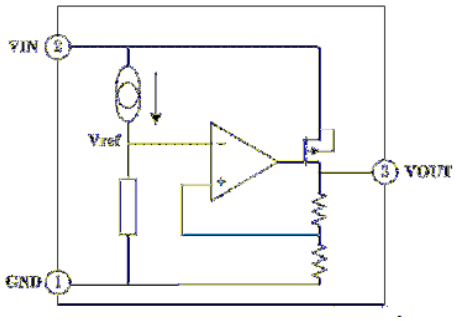



PIN1 GND PIN 2 VIN PIN 3 VOUT

/ Marking

/ See MarkinM e

BRCO7533T

/ Electrical Characteristic Curve

/ The input voltage and output voltage

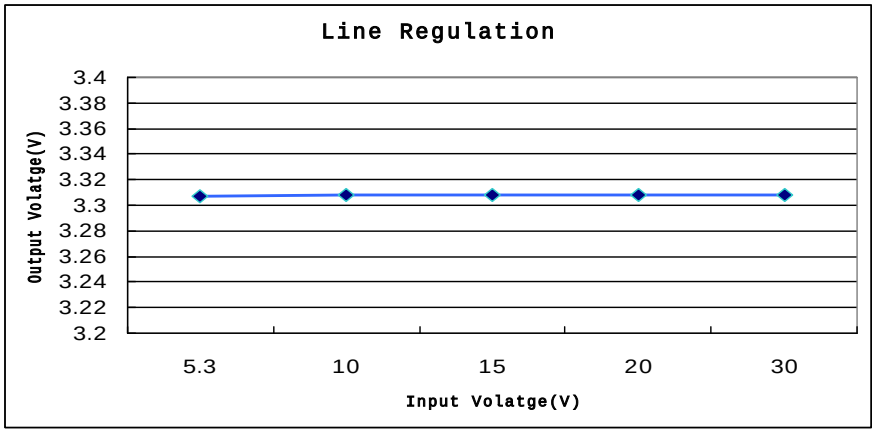

I_{OUT}=10mA

/ The output voltage and load current

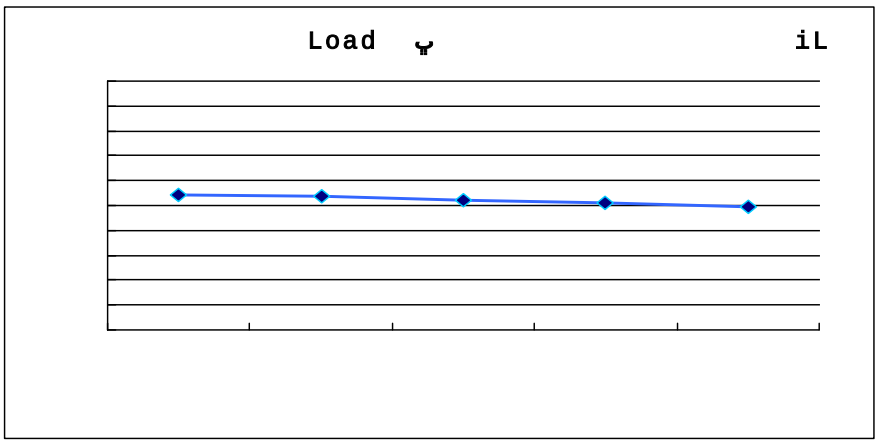

/ Typical Application Circuit

/ Basic Application



/ High Output Current Voltage Regulator

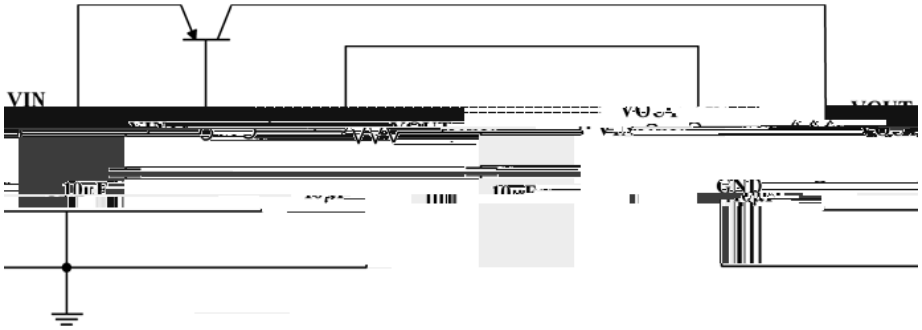

/ Short-Circuit Protection

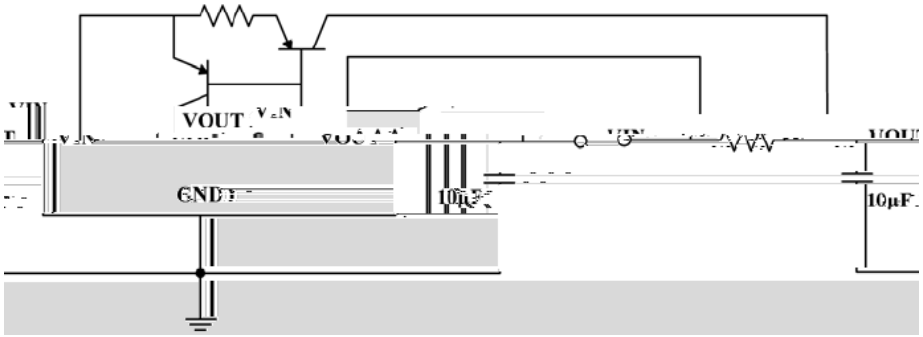

/ Typical Application Circuit

/ Circuit for Increasing Output Voltage

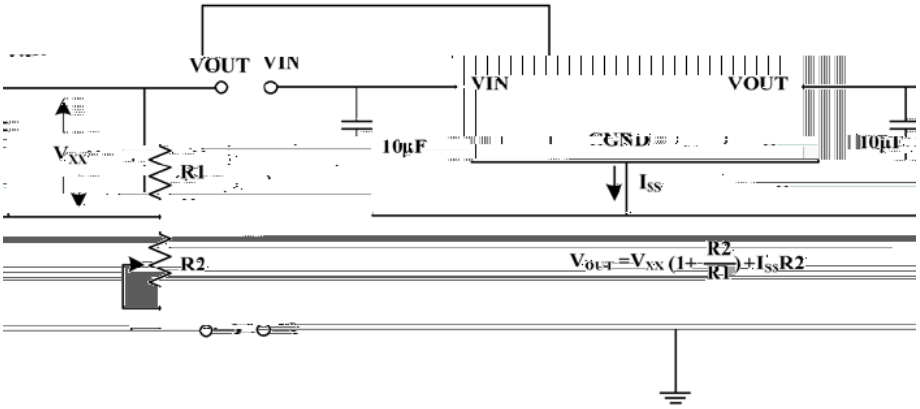

/ Constant Current Regulator

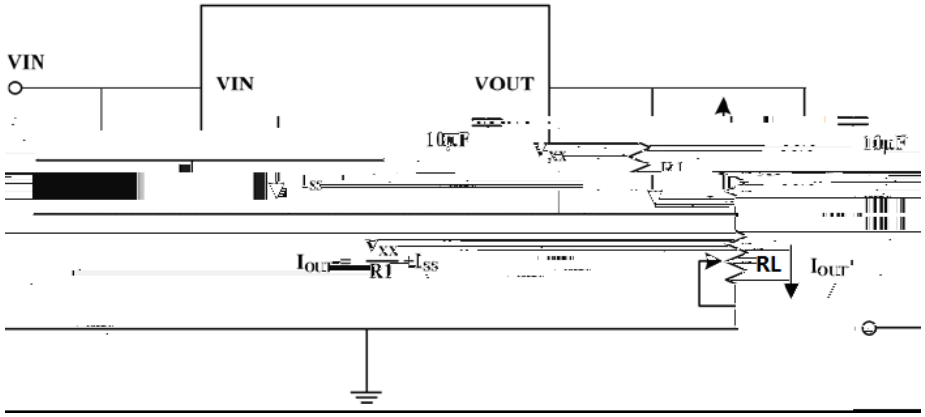

/ Double Output Circuit

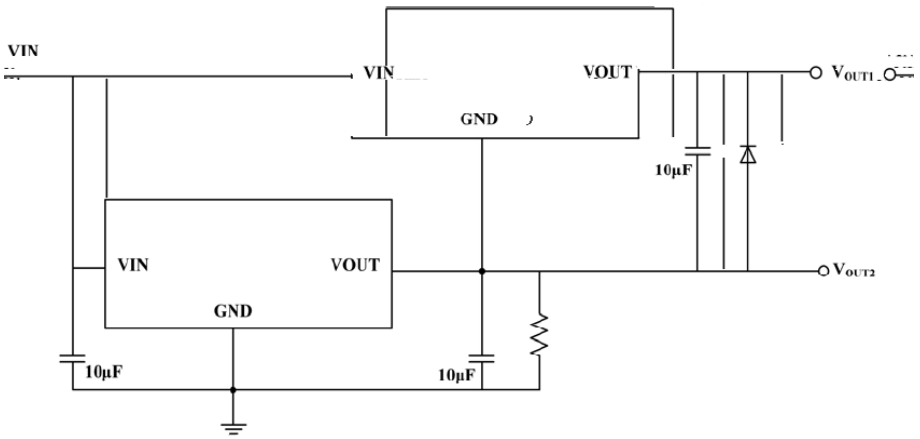

/ Package Dimensions

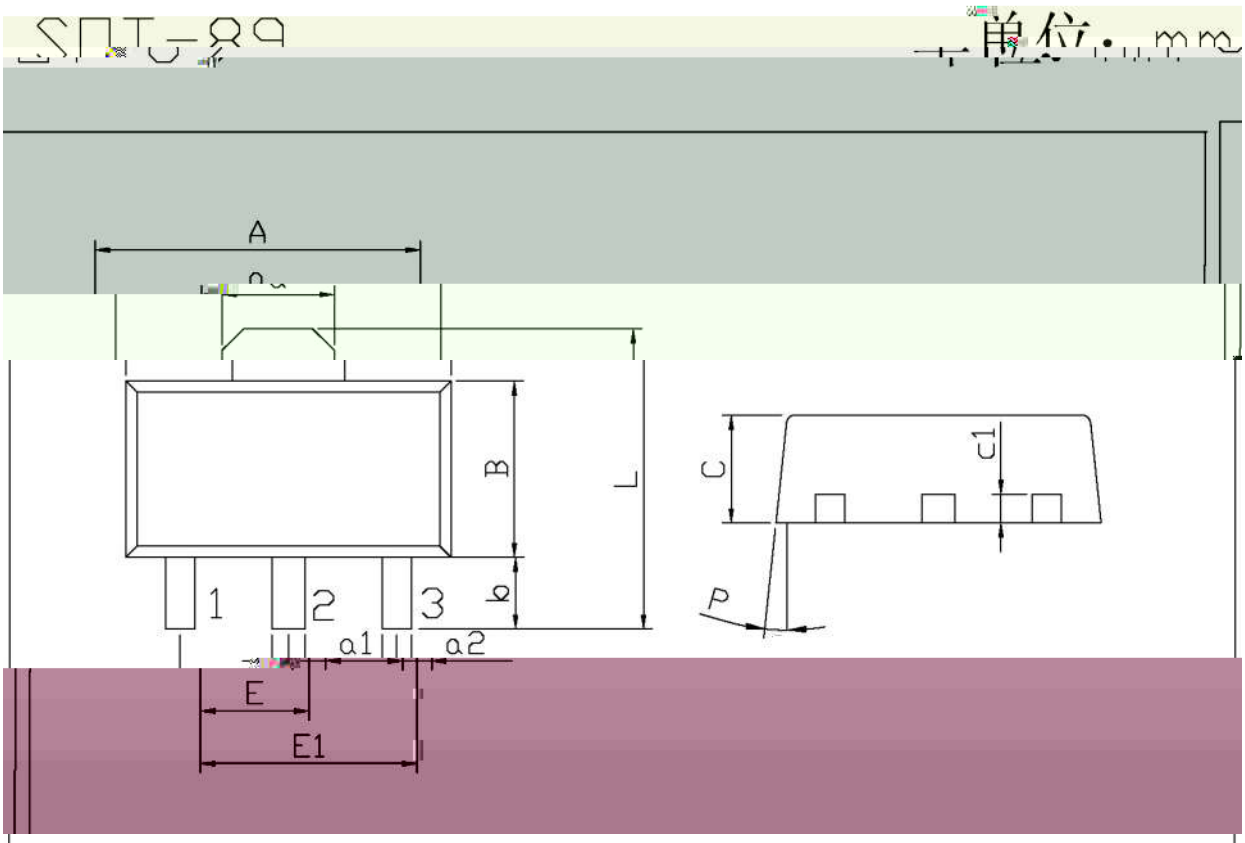

Symbol	Dimensions In Millmeters		Symbol	Dimensions In Millmeters	
	Min	Max		Min	Max
A	4.4	4.7	a1	0.36	0.56

/ Marking Instructions

5

( ) / Temperature Profile for IR Reflow Soldering(Pb-Free)

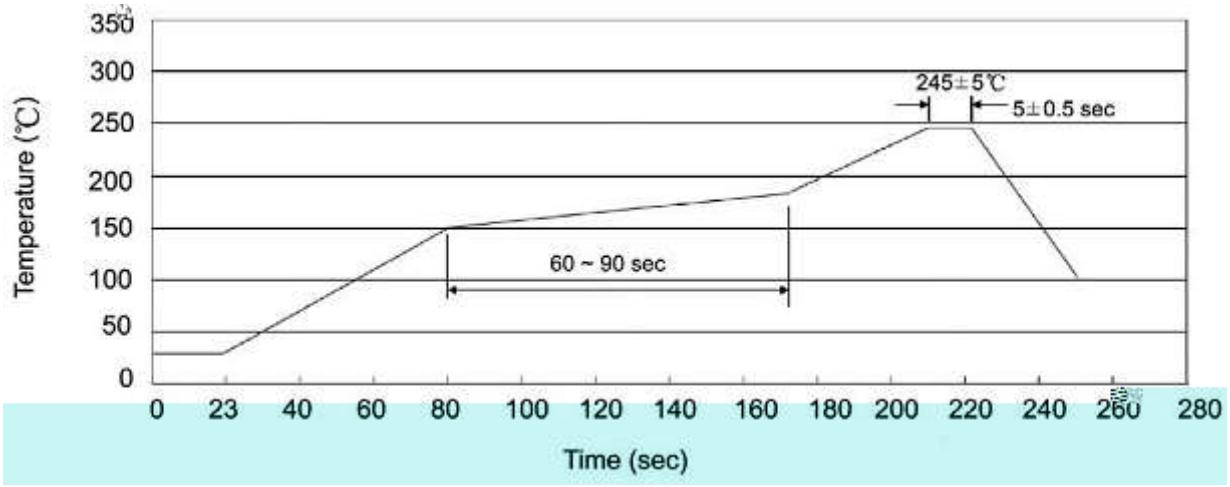

			Note:
1	25 150	60 90sec;	1.Preheating:25~150 , Time:60~90sec.
2	245±5	5±0.5sec;	2.Peak Temp.:245±5 , Duration:5±0.5sec.
3	2 10 /sec.		3. Cooling Speed: 2~10 /sec.

/ Resistance to Soldering Heat Test Conditions

260±5	10±1 sec.	Temp.:260±5	Time:10±1 sec

/ Packaging SPEC.

/ REEL

Package Type 封装形式	Units 包装数量					Dimension 包装尺寸 (unit：mm3)		
	Units/Reel 只/卷盘	Reels/Inner Box 卷盘/盒	Units/Inner Box 只/盒	Inner Boxes/Outer Box 盒/箱	Units/Outer Box 只/箱	Reel	Inner Box 盒	Outer Box 箱
SOT-89	1,000	7	7,000	8	56,000	7″ ×12	180×120×180	385×257×392

/ Notices