	! " # $	% ! " & ' (	! ") * & + ,	- .	/ 0
1	2345644				
7	232365	4	8 9 : ; < = > ? @	A B C	D E F

G 23246H645

/ Descriptions

e f g6h i j k k l m Y n o p q Y r s

Low dropout linear regulator in a SOT-89 Plastic Package .

/ Features

m t u I m Y n I v [w x y M B I z V { X Y | }]3~ I ¡ X ¢ 2£5¤¥ I V W X Y Z [¦ §2 ^ s = > ¨ © s

Low power consumption,Low voltage drop,Small temperature drift coefficient,High input voltage up to 30V,The static current 2.5¤A,The output voltage accuracyª§2 ^ .HF Product.

/ Applications

« ¬ - ® X ¯ ° ± I ² ³ ° ± I ´ µ ¶ · µ ° ± s

For use in power equipment,Communication equipment,Audio and video equipment.

/ Equivalent Circuit

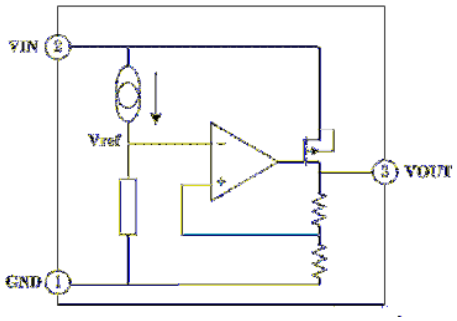

/ Pinning

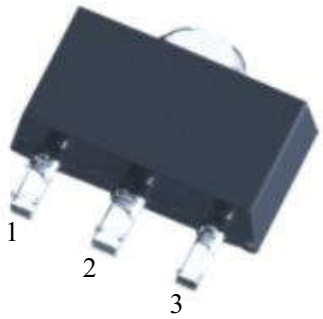

PIN1 ¦ GND PIN 2 ¦ VIN PIN 3 ¦ VOUT

/ Marking

¸ ¹ º » ¼ ½ See Marking Instructions.

L M Parameter	¾ ¿ Symbol	M À Rating	Á Â Unit
Worki			

/ Typical Application Circuit

ā Ă « / Basic Application



V W Ï X ¢ X Y _ ă r / High Output Current Voltage Regulator

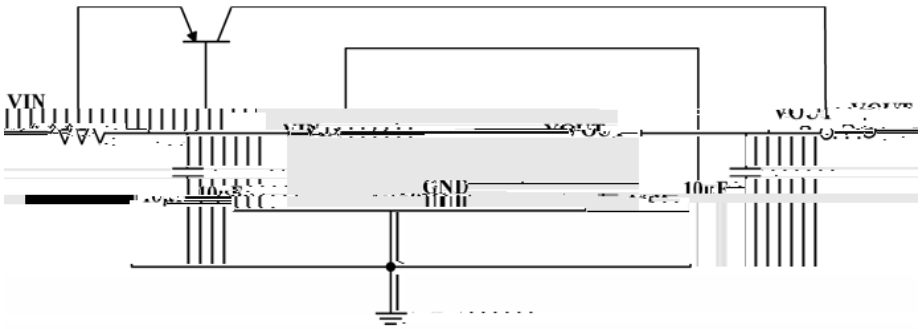

Ą ą Ć ć Ă « / Short-Circuit Protection

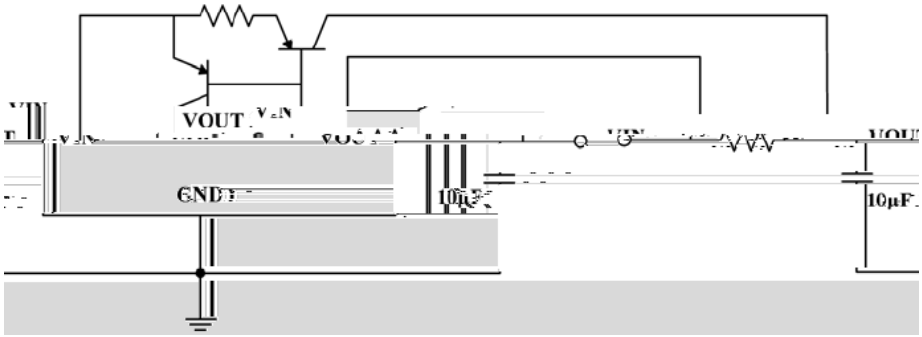

/ Package Dimensions

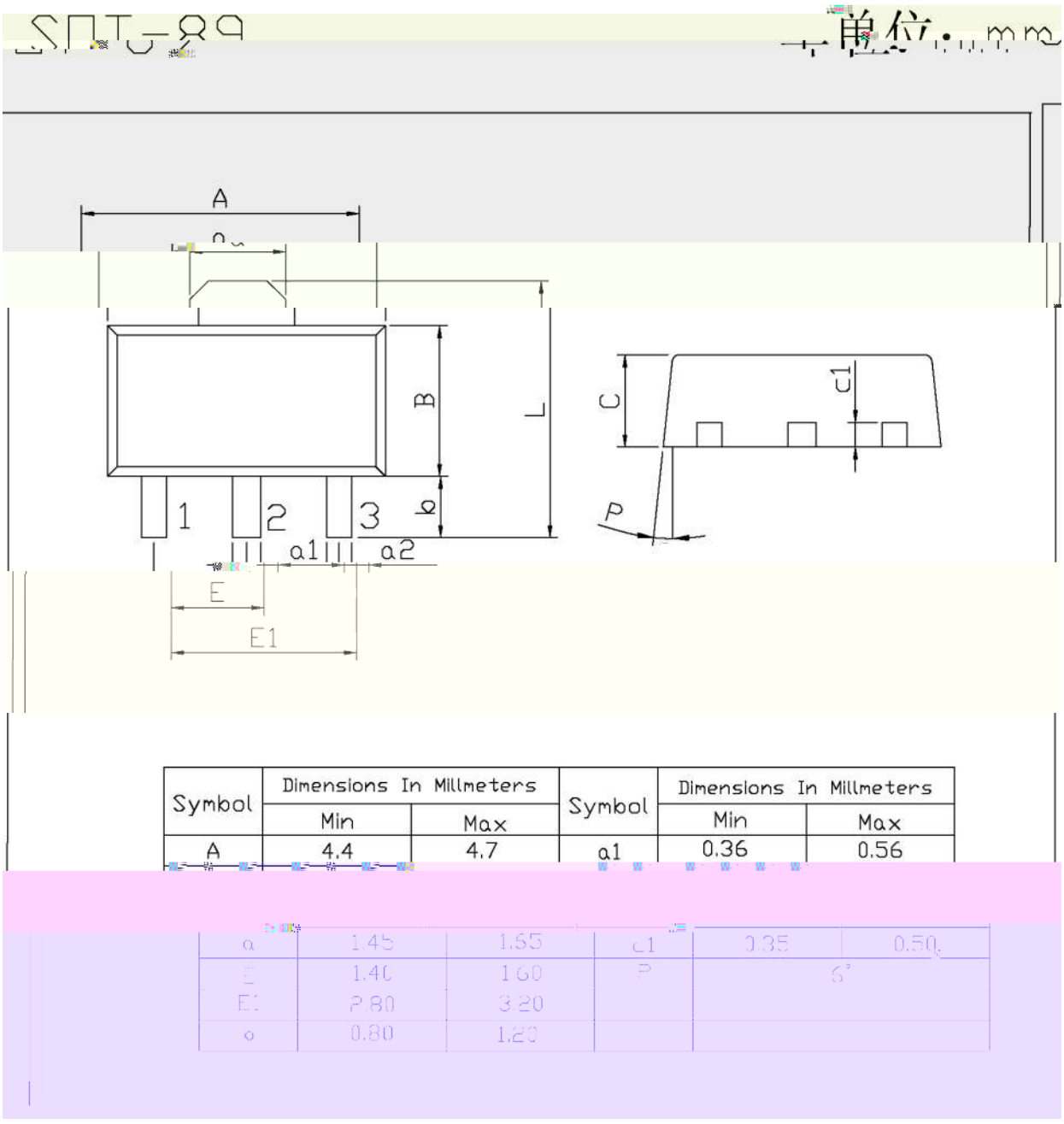

Symbol	Dimensions In Millmeters		Symbol	Dimensions In Millmeters	
	Min	Max		Min	Max
A	4.4	4.7	a1	0.36	0.56
a	1.45	1.65	c1	0.35	0.50
E	1.40	1.60	P	6°	
E1	2.80	3.20			
b	0.80	1.20			

/ Marking Instructions

» ¼ ¦

7550 ¦ a ø ¿ ĉ (

ĊĊ ¦ a ċ ¨ Č ¿ ĉ (I č ċ ¨ Č ¿ Ď ď s

Note:U

BRCO7550T