

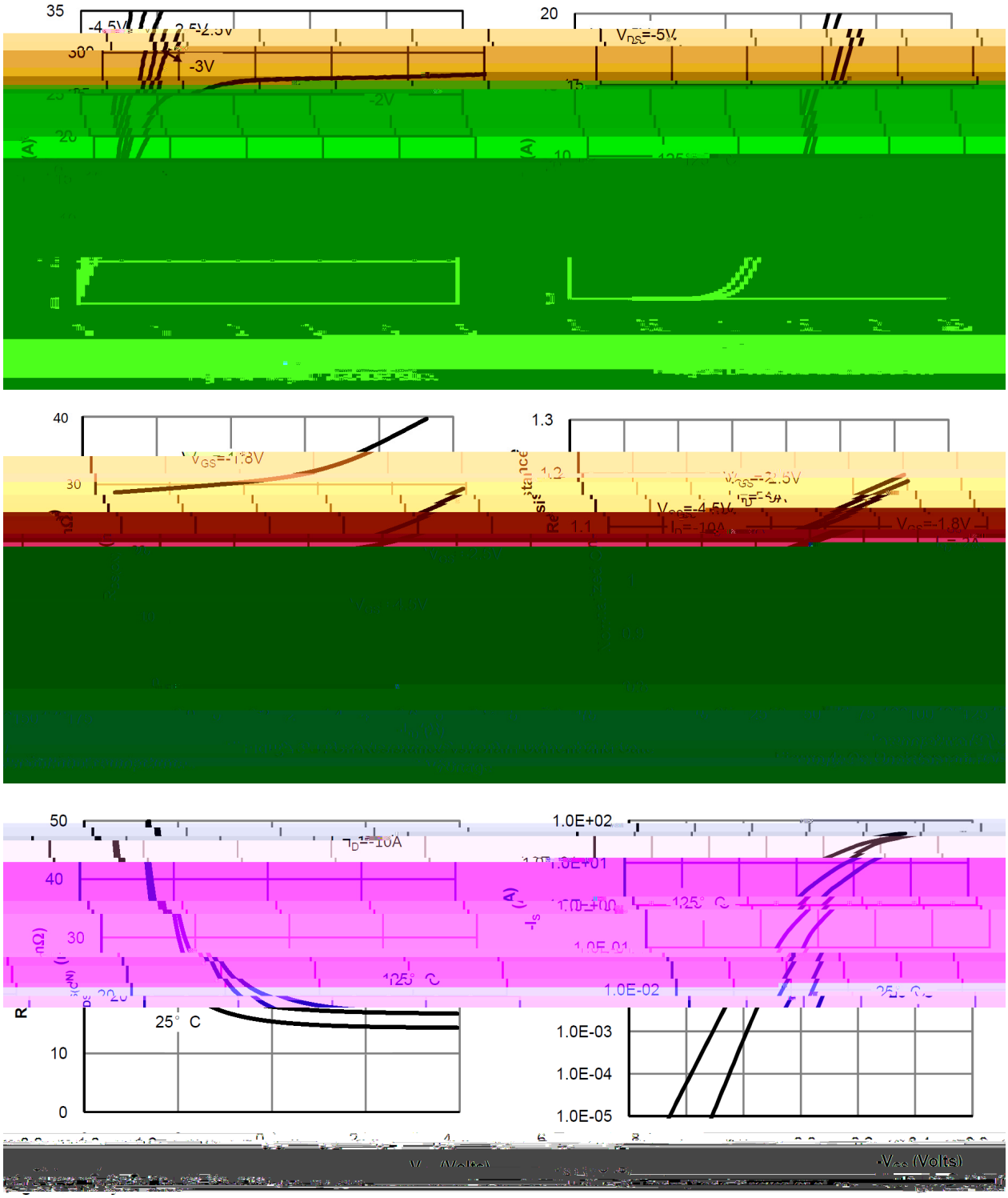
35
-4.5V
-3V
-2V
20
VDS=-5V
40
VGS=-1.8V
30
1.3
VGS=-2.5V
VGS=-4.5V
VGS=-1.8V
50
ID=-10A
40
30
125° C
25° C
10
0
1.0E+02
1.0E+01
1.0E+00
1.0E-01
1.0E-02
1.0E-03
1.0E-04
1.0E-05
-VGS (Volts)

/

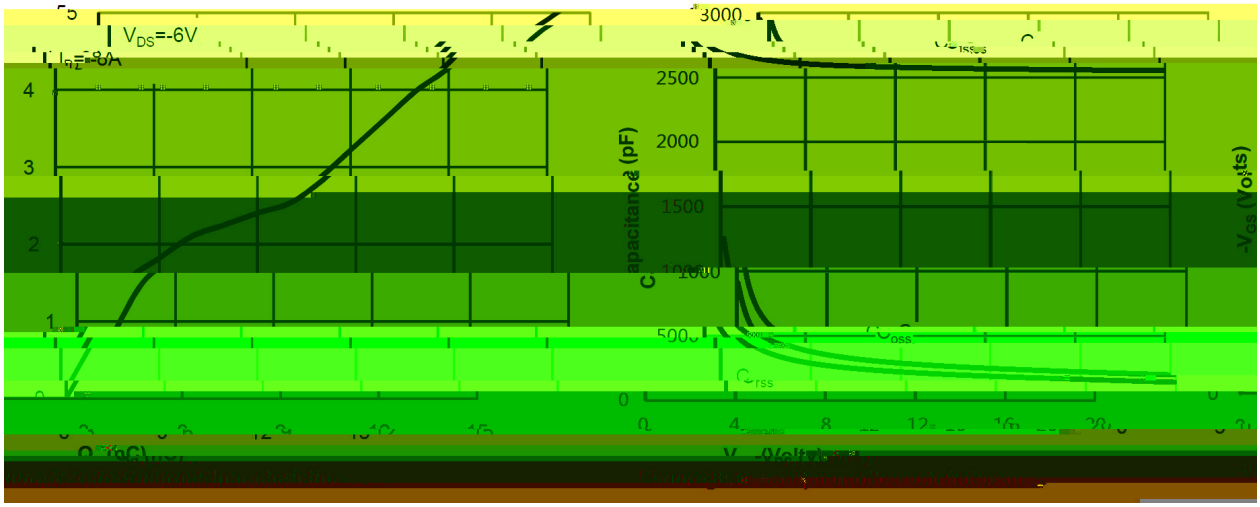

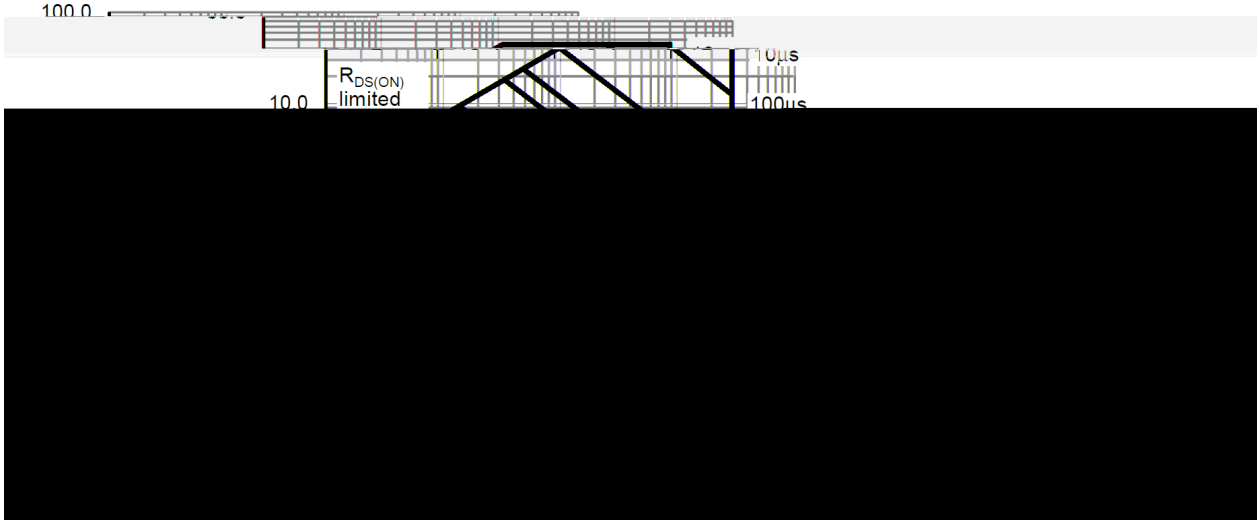

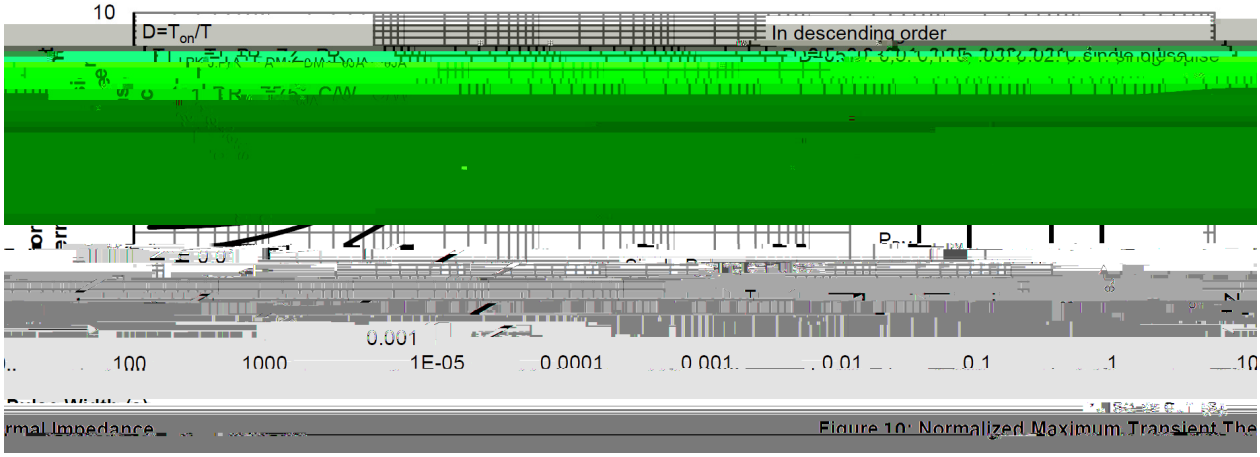

rmal Impedance Figure 10: Normalized Maximum Transient The

DFN2×2B-6L-0.5

Unit:mm

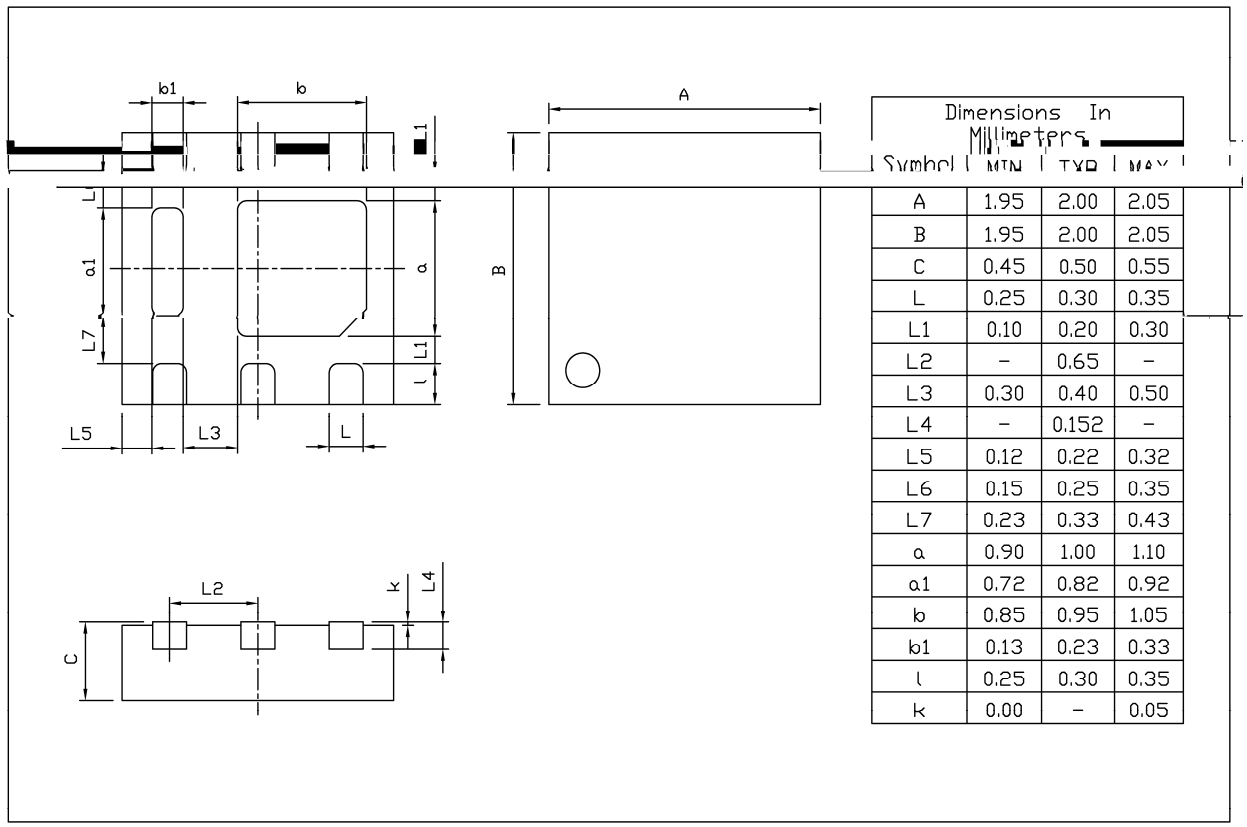

Dimensions In Millimeters			
Symbol	MIN	TYP	MAX
A	1.95	2.00	2.05
B	1.95	2.00	2.05
C	0.45	0.50	0.55
L	0.25	0.30	0.35
L1	0.10	0.20	0.30
L2	–	0.65	–
L3	0.30	0.40	0.50
L4	–	0.152	–
L5	0.12	0.22	0.32
L6	0.15	0.25	0.35
L7	0.23	0.33	0.43
a	0.90	1.00	1.10
a1	0.72	0.82	0.92
b	0.85	0.95	1.05
b1	0.13	0.23	0.33
l	0.25	0.30	0.35
k	0.00	–	0.05

Rev.01 202006

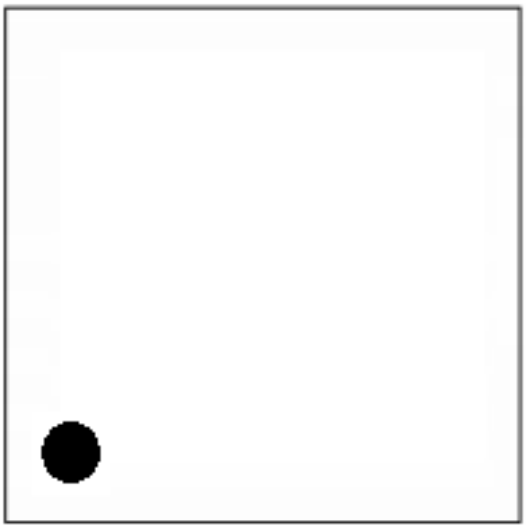

Temperature Profile for IR Reflow Soldering(Pb-Free)

± ± ± ±