/ Descriptions

TO-220S　　Schottky diode in a TO-220S Plastic Package.

/ Features

Low forward voltage drop,low power losses,High efficiency operation.

/ Applications

OR-ing　　DC-DC

For use in high frequency inverters, switching power supplies, freewheeling diodes, OR-ing diode, dc-to-dc converters and reverse battery protection.

/ Equivalent Circuit

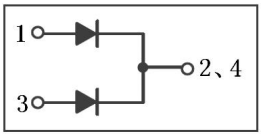

/ Pinning

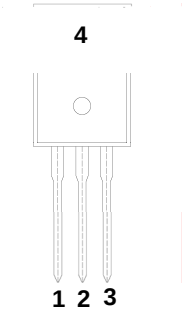

PIN1　Anode　　PIN 2　Cathode　　PIN 3　Anode　　PIN 4　NC

/ h_{FE} Classifications & Marking

See Marking Instructions.

Parameter	Symbol	Rating	Unit
Peak Repetitive Reverse Voltage Working Peak Reverse Voltage DC Blocking Voltage	V_{RRM} V_{RSM} V_{DC}	150	V
RMS Reverse Voltage	V_{RMS}	105	V
Average Rectified Forward Current	$I_{F(AV)}$	2X5	A
Non Repetitive Peak Surge Current	I_{FSM}	80	A
Thermal Resistance Junction to Case	$R_{\theta Jc}$	3.5	/W
Junction and Storage Temperature Range	T_j T_{stg}	-55~+150	

Parameter	Symbol	Test Conditions

/ Electrical Characteristic Curve

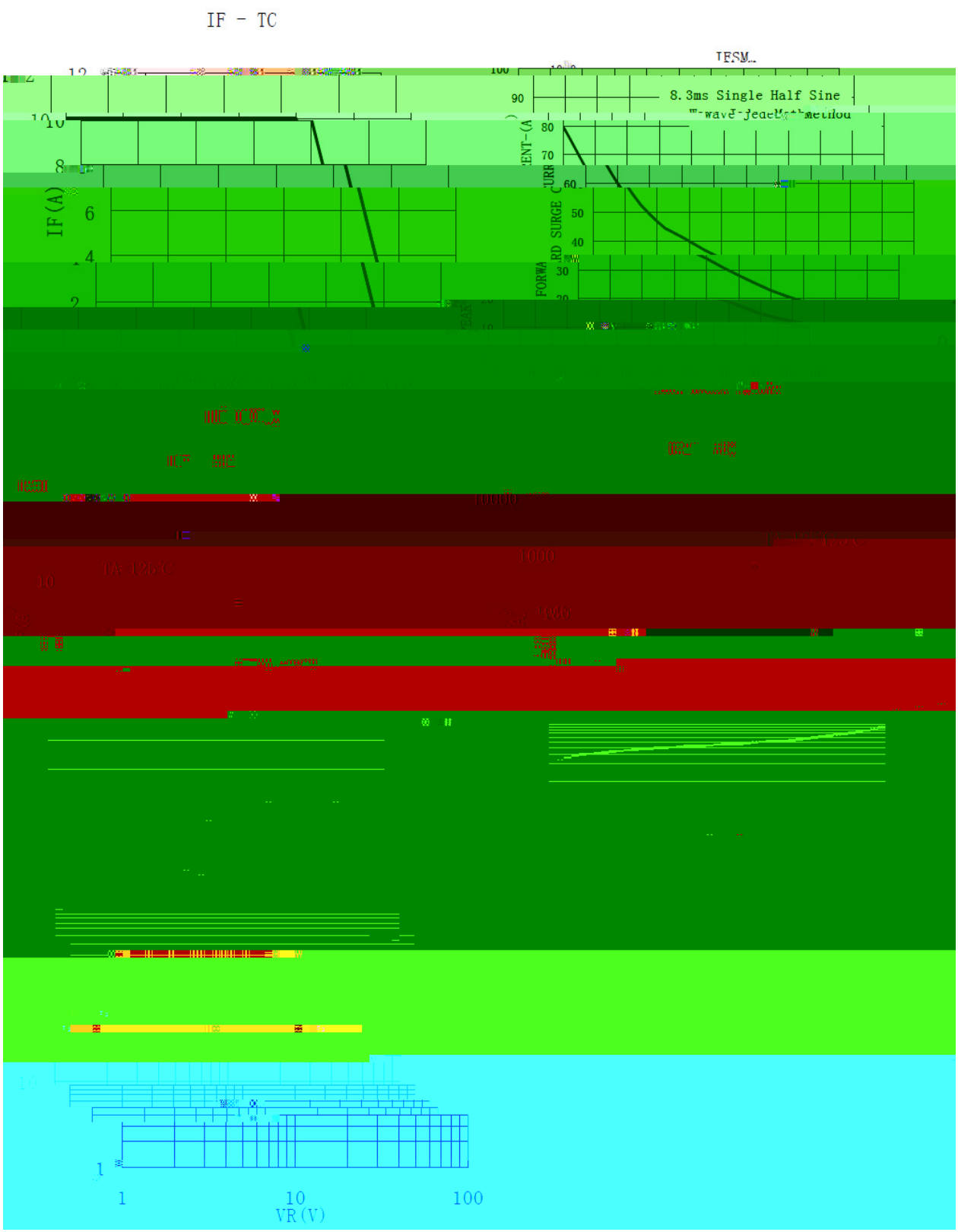

/ Package Dimensions

TO-220S Unit: mm

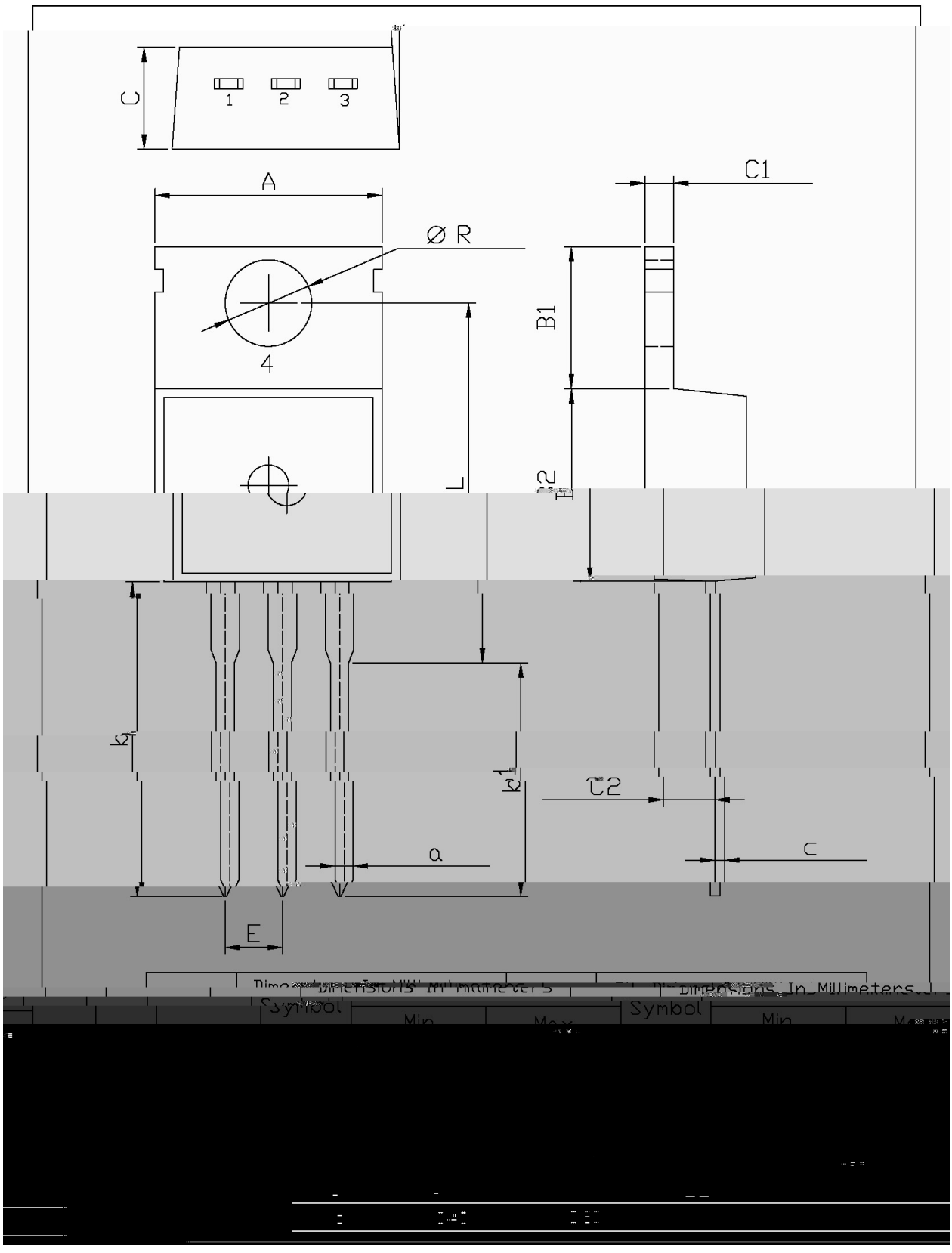

LV10150JCT

Rev.E Mar.-2016