/ Revised record

F	2017-9				
G	2022-1-27	6	7- *89 , 7- : 98		

/ Descriptions

TO-92 :5;+%< # <=;%+53#›&#%#?@'A(#B;%1+›4#B%4C%< !#

/ Features

1.240V 0.5 1 100uA 100mA

$V_O = V_{ref}$ 20V (55μA) (0.05Ω)

B3 4›1 #3 0 3 &4 # 5;+%< #+5#D!(E) :F<=%3%&+ G#)!H I FD I #F3 0 3 &4 # 5;+%< #?5; 3%&4 F#1›&C#4=33 &+#

4%,%2›;›+JFD))=7～D))6 7FK=›4C#+=3&'5&F#%GL=1+%2; 5=+,=+# 5;+%< F#:@M:3 0～():F;5/#5, 3%+›5&%;#

4%+*5G #4=33 &+FHHN7#+J,›4%;F)!)HO#+J,›4%;#5=+,=+#›6, G%&4 !#

#

/ Applications

P›& %3#3 <=;%+531F#%GL=1+%2; #,5/ 3#1=,,;JF#1/›+4*›&<#,5/ 3#1=,,;J!#

#

/ Equivalent Circuit



#

/ Pinning



#

B0RD S# # # B0R#(7# # B0R#T ##

#

/ Marking

U #V%3C›&<#0&1+3=4+›5&1#

# # #
B%3% 6 + 3# UJ 6 25;# %+›&<#

& Test circuits&Typical Application

YP@XS# [⍵7 " 7V-#

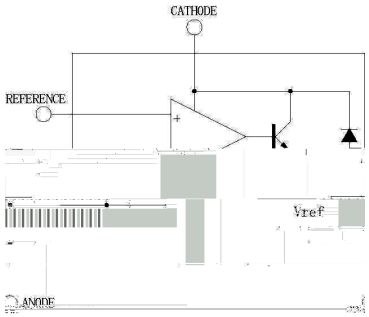



?9U?#X⍵ XW⍵?U-#

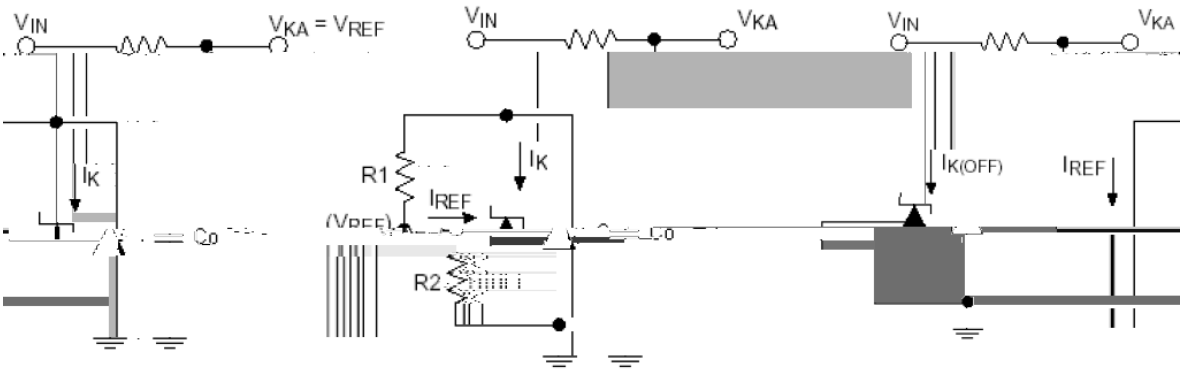

? 1+#X›34=›+#853#:S7M: 98，#######? 1+#X›34=›+#053#:S7h: 98#######? 1+#X›34=›+#853#⍵S7`@88a#
X5M)!DN8########################## X5M)!DN8#

? i B⍵X7P#7BBP⍵X7?⍵@RU-#

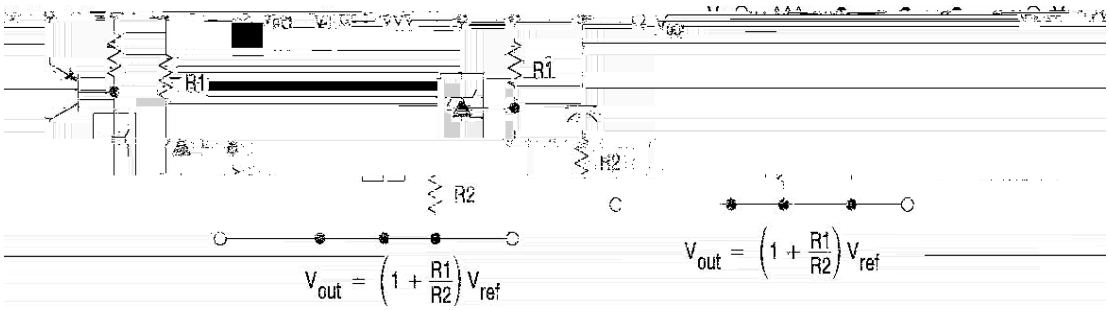

/ Electrical Characteristic Curve

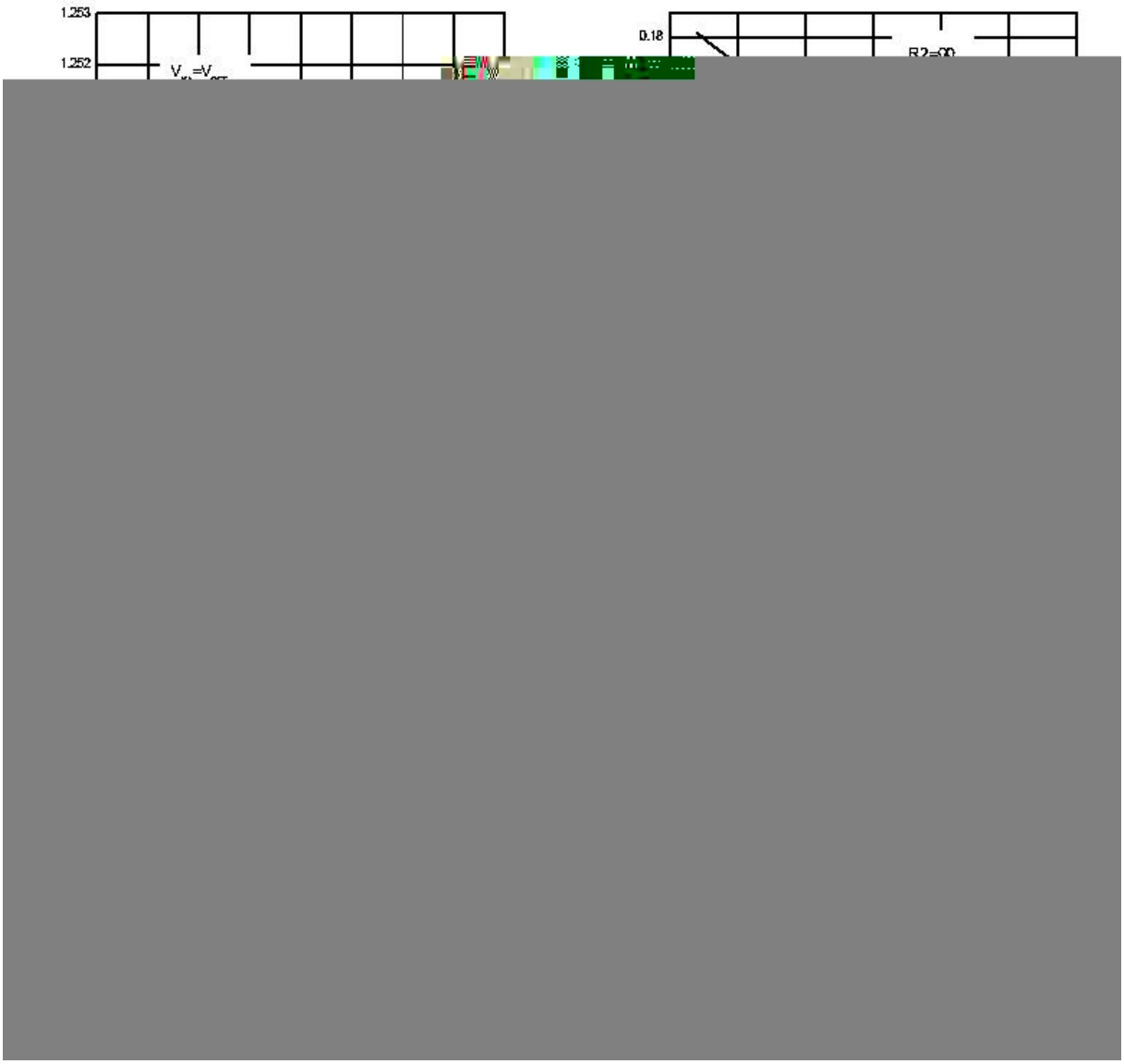

TL432

! " #$%&!' ( ) ((## **DATASHEET**

#

/ Marking Instructions

#

#

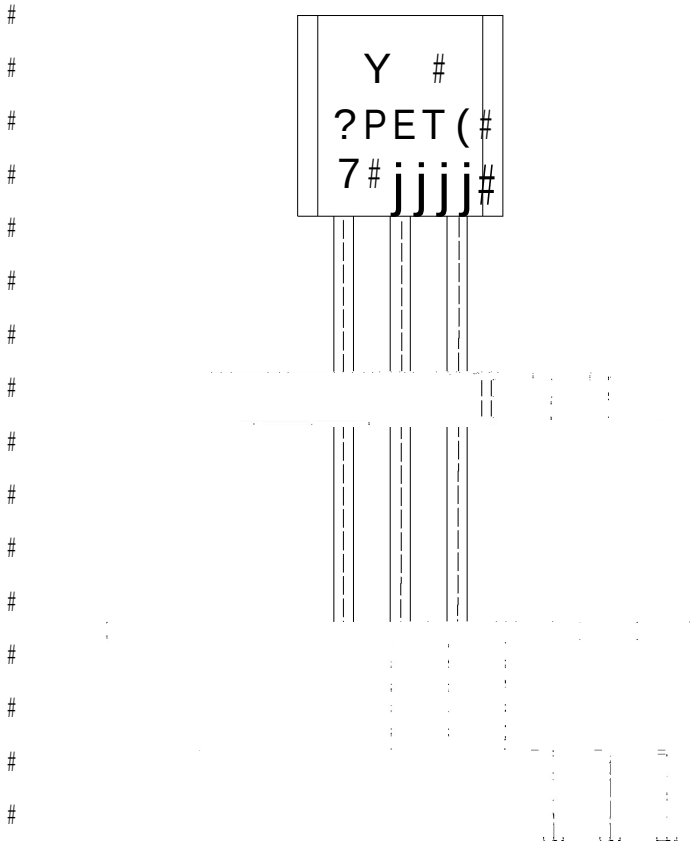

#

Y ## # #

?PET(# # #

7-# # # : 98 #

**** #

R5+ -#

Y -### # X56,%&J#X5G !#

?PET(-# # B35G=4+#?J, !#

7-# # # : 98#X;%11>0>4%+>5&1#UJ625;#

jjjj-# # # P5+#R5!#X5G F#45G #4*%&< #/>+*#P5+#R5!#

#

#

( ) / Temperature Profile for Dip Soldering(Pb-Free)

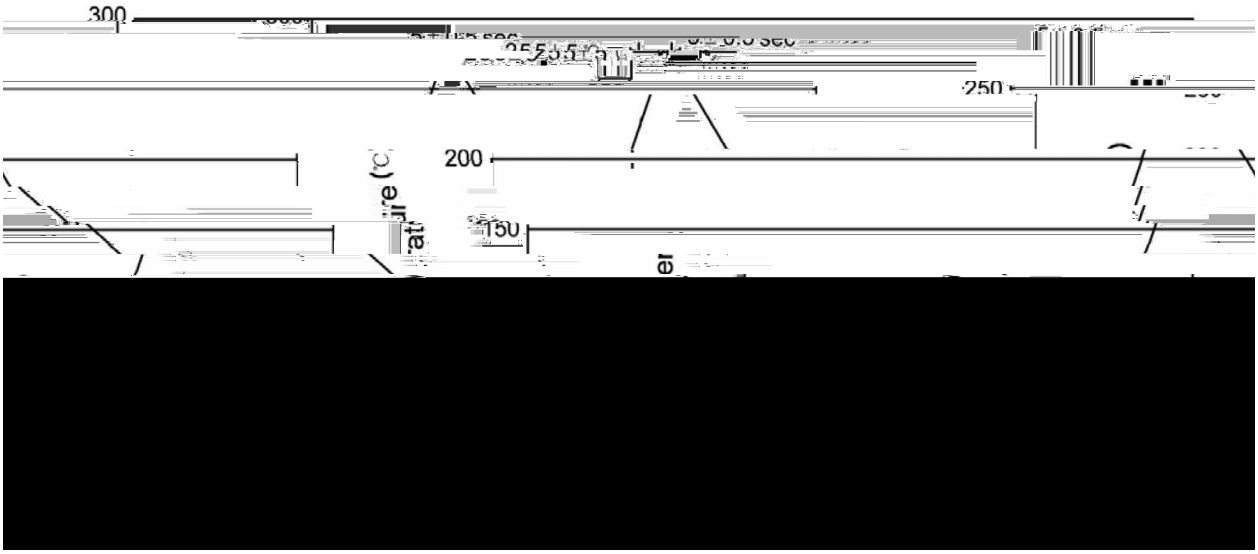

R5+ -#

D (H DH) ^) A)1 4k# # # D!B