/ Descriptions

3.0A DBF

3.0A Single-Phase Glass Passivated Bridge Rectifiers, DBF thin package.

/ Features

50V~1000V 3.0A

Reverse Voltage :50 to 1000V,Forward Current: 3.0A, Designed for Surface Mount Application,HF product.

General purpose.

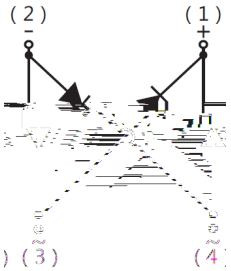

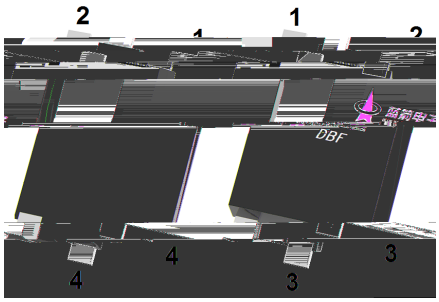

/ Marking

See Marking Instructions.

/ Absolute Maximum Ratings(Ta=25)

Parameter	Symbol	Rating							Unit
		TMBF 3005G	TMBF 301G	TMBF 302G	TMBF 304G	TMBF 306G	TMBF 308G	TMBF 310G	
Maximum Repetitive Peak Reverse Voltage	V_{RRM}	50	100	200	400	600	800	1000	V
Maximum RMS voltage	V_{RMS}	35	70	140	280	420	560	700	V
Maximum DC Blocking Voltage	V_{DC}	50	100	200	400	600	800	1000	V
Maximum average forward rectified output current at T_A=40	$I_{F(AV)}$	3.0							A
Peak forward surge current single sine-wave superimposed on rated load (JEDEC Method)	I_{FSM}	80							A
Rating for fusing (t<8.3ms)	I^2t	26.56							A^2s
Typical Thermal Resistance Note1	R_{JA}	55							/W
	R_{JC}	8							/W
Typical Junction Capacitance Note2	C_j	35							pF
Operating and Storage Temperature Range	T_j,T_{stg}	-55~+150							

Note:

1. Thermal resistance from Junction to Ambemt on P.C.board mounting.
2. Measured at 2.0MHz and applied reverse voltage of 4.0 volts.

/ Electrical Characteristics(Ta=25)

Parameter	Symbol	Test Conditions	Rating	Unit
Maximum Forward Voltage	V_F	I_F=1.5A	1.05	V
Maximum DC Reverse Current at Rated DC Blocking Voltage	I_R	T_a=25	5	μA
		T_a=125	500	

/ Electrical Characteristic Curve

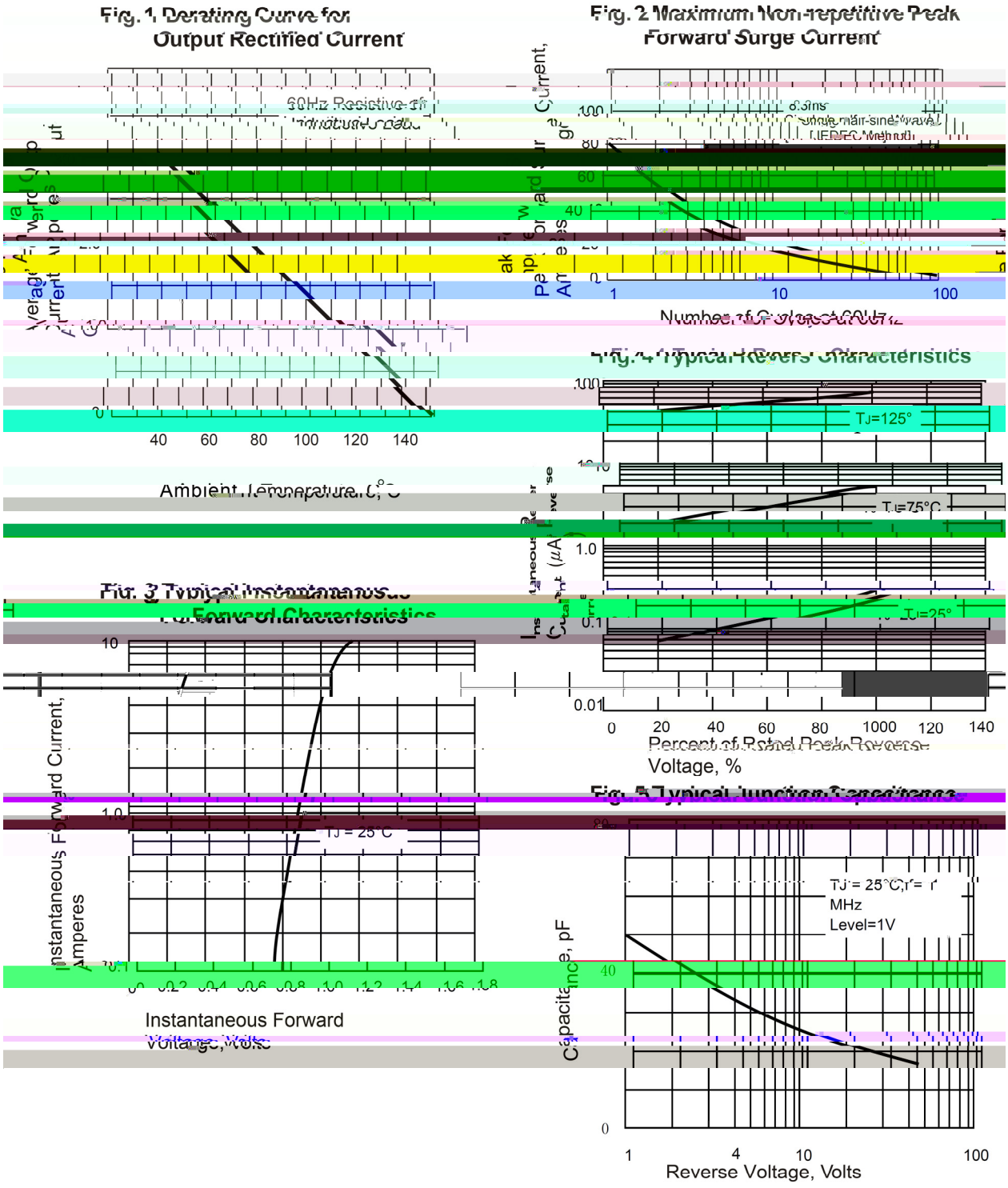



Bottom View　　Top View

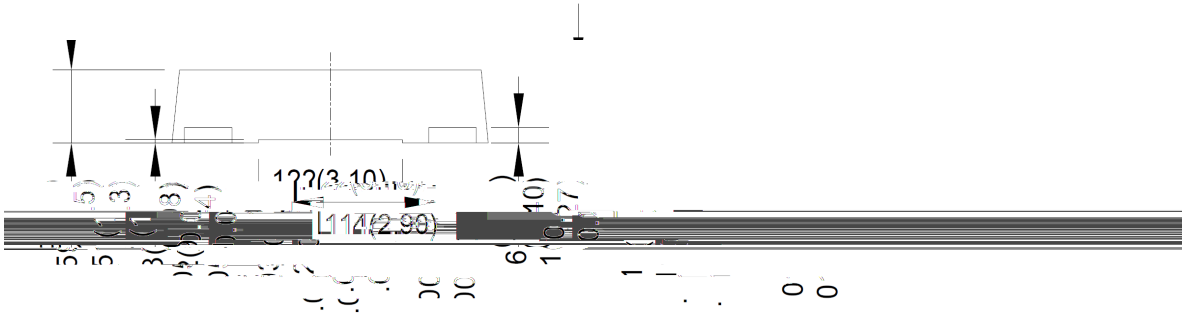

Side View

/ Marking Instructions

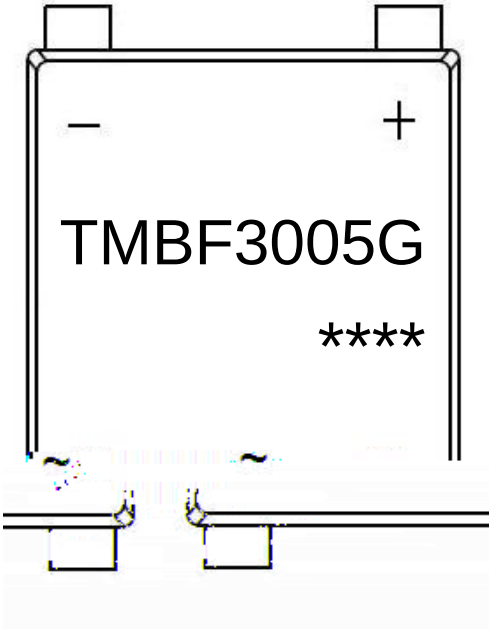

TMBF3005G

****

Note:

TMBF3005G	Product Type
****	Lot No. Code, code change with Lot No

( ) / Temperature Profile for IR Reflow Soldering(Pb-Free)

Note:

1 150 180